Installation and Setup Guide

020-103331-05

Christie Eclipse

CHRISTIE®

NOTICES

COPYRIGHT AND TRADEMARKS

Copyright © 2025 Christie Digital Systems USA Inc. All rights reserved.

All brand names and product names are trademarks, registered trademarks or trade names of their respective holders.

GENERAL

Every effort has been made to ensure accuracy, however in some cases changes in the products or availability could occur which may not be reflected in this document. Christie reserves the right to make changes to specifications at any time without notice. Performance specifications are typical, but may vary depending on conditions beyond Christie's control such as maintenance of the product in proper working conditions. Performance specifications are based on information available at the time of printing. Christie makes no warranty of any kind with regard to this material, including, but not limited to, implied warranties of fitness for a particular purpose. Christie will not be liable for errors contained herein or for incidental or consequential damages in connection with the performance or use of this material. Our centers of excellence for manufacturing in Kitchener, Ontario, Canada and in Shenzhen, China are ISO 9001:2015 Quality Management System-certified.

Christie is committed to making our documents free from language bias; however, we are not responsible for the language used on any linked or third-party documentation.

For the most current technical documentation and office contact information, visit *https://www.christiedigital.com/*.

Warranty

Products are warranted under Christie's standard limited warranty, the details of which are available at *https://www.christiedigital.com/help-center/warranties/* or by contacting your Christie dealer or Christie.

REGULATORY

The product has been tested and found to comply with the limits for a Class A digital device, pursuant to Part 15 of the FCC Rules. These limits are designed to provide reasonable protection against harmful interference when the product is operated in a commercial environment. The product generates, uses, and can radiate radio frequency energy and, if not installed and used in accordance with the instruction manual, may cause harmful interference to radio communications. Operation of the product in a residential area is likely to cause harmful interference in which case the user will be required to correct the interference at the user's own expense. Changes or modifications not expressly approved by the party responsible for compliance could void the user's authority to operate the equipment

CAN ICES-3 (A) / NMB-3 (A)

이 기기는 업무용(A급)으로 전자파적합등록을 한 기기이오니 판매자 또는 사용자는 이점을 주의하시기 바라며, 가정 외의 지역에서 사용하는 것을 목적으로 합니다.

ENVIRONMENTAL

The product is designed and manufactured with high-quality materials and components some of which can be recycled and reused. This symbol means electrical and electronic equipment, at their end-of-life, should be disposed of separately from regular waste. Please dispose of the product appropriately and according to local regulations. In the European Union, separate collection systems are for used electrical and electronic products.

If printing this document, consider printing only the pages you need and select the double-sided option.

Please help us to conserve the environment we live in!

Notation

Learn the hazard and information symbols used in the product documentation.

Danger messages indicate a hazardous situation which, if not avoided, results in death or serious injury.

Warning messages indicate a hazardous situation which, if not avoided, could result in death or serious injury.

Caution messages indicate a hazardous situation which, if not avoided, could result in minor or moderate injury.

Notice messages indicate a hazardous situation which, if not avoided, may result in equipment or property damage.

Information messages provide additional information, emphasize or provide a useful tip.

Content

Introduction. 6

Product documentation. 6

Related documentation. 6

Safety precautions. 7

Installation safety and warning guidelines. 7

AC power precautions. 8

Laser safety precautions. 8

Light intensity hazard distance. 9

Product labels. 12

General hazards. 12

Mandatory action. 14

Electrical labels. 14

Laser labels. 14

Additional safety hazards. 15

List of components. 15

Laser illumination source specifications. 15

Chiller specifications. 17

Accessories. 17

Technical support. 19

Installation and setup. 20

Site requirements. 20

Physical environment. 20

Power requirements. 20

Projector components. 21

IR/wired remote keypad. 22

Display panel components. 24

Required tools. 24

Workflow: Installing and setting up the Christie Eclipse system. 25

Workflow: Setting up the projector head. 26

Lifting and positioning the projector. 26

Installing the zoom motor kit on the lens. 28

Installing the lens. 31

Removing the reservoir plug. 32

Copyright © 2025 Christie Digital Systems USA, Inc. All rights reserved.
If printed, please recycle this document after use.

Aligning the illumination optical system 1 (IOS1) fold mirror. 34
Connecting the projector to AC power. 36
Workflow: Setting up the laser illumination source. 36
Installing the J33 terminal block on the laser illumination source. 36
Protecting the fiber connector. 38
Connecting the fiber optic cable to the projector. 41
Connecting the Ethernet cable to the projector. 44
Setting up the chiller unit. 45
Performing initial system start-up. 45
Turning on the system. 47
Turning off the system. 50
Projector LED status indicators. 51
Projector LED shutter indicators. 52
Adjusting the image. 52
Aligning the image. 52
Rotating the integrator rod. 55
Adjusting horizontal boresight. 55
Adjusting vertical boresight. 56
Adjusting convergence. 57
Adjusting images with full light. 59
Disposing of the product packaging. 64
Completing the installation checklist. 64

Connecting devices and establishing communication. 65

Video Input panel. 65
Configuring video input. 68
Enabling projector communication. 69
Setting the remote access level. 69
Selecting a port configuration. 69
Selecting a video source. 70
Connecting an HDMI video source. 70
Connecting 12G, 6G, 3G, or HD SDI video source. 71
Connecting a DisplayPort video source. 71
Connecting Christie Link video source. 72
Connecting an SDVoE video source. 72
Determining if SDVoE is supported. 73
Connecting to a computer with USB. 73
Connecting to a computer or server with 10/100/1000 base-T Ethernet. 73
Setting up the Ethernet. 74

Copyright © 2025 Christie Digital Systems USA, Inc. All rights reserved.
If printed, please recycle this document after use.

Communicating with Christie Eclipse through Art-Net. 74
Configuring the RS232 port. 76
Configuring the GPIO. 77
GPIO connector. 77
Enabling the wired remote keypad. 78

Regulatory. 80
Safety. 80
Electro-magnetic compatibility. 80
Emissions. 80
Immunity. 81
California law on security. 81
Environmental. 81

Copyright © 2025 Christie Digital Systems USA, Inc. All rights reserved.
If printed, please recycle this document after use.

Introduction

This manual is intended for professionally trained operators of Christie high-brightness projection systems.

The illustrations in this document are for representation only and may not depict your model exactly.

Only Christie qualified technicians who are knowledgeable about the hazards associated with laser use, high-voltage, and the high temperatures generated by the projector lasers are authorized to assemble, install, and service the projector.

For complete Christie Eclipse product documentation and technical support, go to *www.christiedigital.com*.

Product documentation

For installation, setup, and user information, see the product documentation available on the Christie website. Read all instructions before using or servicing this product.

1. Access the documentation from the Christie website:
   - Go to this URL: *http://bit.ly/2u1BW8s* or *https://www.christiedigital.com/en-us/business/products/projectors/3-chip-dlp/christie-eclipse*.
   - Scan the QR code using a QR code reader app on a smartphone or tablet.
2. On the product page, select the model and switch to the **Downloads** tab.

Related documentation

Additional information on this product is available in the following documents.

- *Christie Eclipse Product Safety Guide (P/N: 020-103330-XX)*
- *Christie TruLife+ User Guide (P/N: 020-103315-XX)*
- *Christie TruLife+ Status System Guide (P/N: 020-103327-XX)*
- *Christie TruLife+ Serial Commands Guide (P/N: 020-103316-XX)*
- *Christie Eclipse Service Guide (P/N: 020-103344-XX)*

Copyright © 2025 Christie Digital Systems USA, Inc. All rights reserved.
If printed, please recycle this document after use.

Safety precautions

Learn about the safety precautions related to the Christie Eclipse.

This manual is intended for professionally trained operators of the Christie Eclipse laser projection system.

Warning! If not avoided, the following could result in death or serious injury.

- This projector is certified to work only with certain specified third-party components. Use only Christie approved third-party components with the projector. Using non-approved components with the projector can lead to potential safety hazards and void the projector warranty.
- Only Christie qualified technicians who are knowledgeable about the hazards associated with laser use, high-voltage, and high temperatures generated by the product are authorized to assemble, install, and service the Christie Laser Projection System.

Installation safety and warning guidelines

Read all safety and warning guidelines before installing the projector.

Warning! If not avoided, the following could result in death or serious injury.

- Possible hazardous optical radiation emitted from this product. (Risk group 3)
- Christie products must be installed and serviced by Christie qualified technicians.
- Do not operate the product without all of its covers in place.
- Always install safety straps when the frame and projector are installed overhead.
- Observe load ratings and applicable local safety codes.
- When installing the projector in portrait mode, the rigging device must have a sufficient load rating, as identified in this manual.
-
- This product must be installed within a restricted access location not accessible by the general public.
- Install the product so users and the audience cannot enter the restricted area at eye level.
- Only personnel who are trained on the precautions for the restricted access location can be granted entry to the area.
- Only Christie qualified technicians are permitted to open product enclosures.

Caution! If not avoided, the following could result in minor or moderate injury.

- ELECTRICAL and BURN HAZARD! Use caution when accessing internal components.
- Only Christie qualified technicians are authorized to use the tools provided in the toolbox.

Copyright © 2025 Christie Digital Systems USA, Inc. All rights reserved.
If printed, please recycle this document after use.

AC power precautions

Learn the safety precautions related to AC power.

Warning! If not avoided, the following could result in death or serious injury.

- SHOCK HAZARD! Only use the AC power cord provided with the product or recommended by Christie.
- FIRE AND SHOCK HAZARD! Do not attempt operation unless the power cord, power socket, and power plug meet the appropriate local rating standards.
- SHOCK HAZARD! Do not attempt operation if the AC supply is not within the specified voltage and current, as specified on the license label.
- SHOCK HAZARD! The AC power cord must be inserted into an outlet with grounding.
- SHOCK HAZARD! A dedicated, protected ground or earth wire must be installed on the product by Christie qualified technicians or electricians before it can be connected to power.
- SHOCK HAZARD! Disconnect the product from AC before installing, moving, servicing, cleaning, removing components, or opening any enclosure.
- The appliance coupler and main power supply plug must be easily accessible for disconnecting the product from the power source.

Caution! If not avoided, the following could result in minor or moderate injury.

- FIRE HAZARD! Do not use a power cord, harness, or cable that appears damaged.
- FIRE OR SHOCK HAZARD! Do not overload power outlets and extension cords.
- SHOCK HAZARD! Power supply uses double pole/neutral fusing. Disconnect all power sources before opening the product.

Laser safety precautions

Learn the safety precautions related to laser components.

The components that comprise the Christie Eclipse have laser classifications, as outlined by the International Electrotechnical Commission (IEC), ranging from Class 1 to Class 4. Immediate skin hazard and eye hazard from exposure to either the direct or specular reflected beam; may pose a diffuse reflection or fire hazard.

- Wavelength: 435 nm to 660 nm.
- Beam divergence: 0.1 rad to 0.96 rad, lens dependent.
- Pulse pattern: Continuous Wave (CW).
- Maximum output: < 10 W

Copyright © 2025 Christie Digital Systems USA, Inc. All rights reserved.
If printed, please recycle this document after use.

Warning! If not avoided, the following could result in death or serious injury.

- This product must be installed within a restricted access location not accessible by the general public.
- The installation setup must prevent access to the nominal ocular hazard area.
- Only Christie qualified technicians who are knowledgeable about the hazards associated with laser use, high-voltage, and high temperatures generated by the product are authorized to assemble, install, and service the Christie Laser Projection System.
- UV EXPOSURE! Protective UV safety glasses with side shields and protective safety clothing approved by Christie must be worn when performing optical adjustments or servicing the product.
- EXTREME BRIGHTNESS! Do not place reflective objects in the product light path.
- LASER RADIATION! Do not look into the end of a fiber optic cable while the product is operational.
- Invisible infrared LED radiation might be emitted from disconnected fibers or connectors. Do not stare into beams or view directly with optical instruments.
- Lasers contain a high energy density, which can be dangerous for skin tissue as well as pose an electrical, chemical, and non-ionizing radiation hazard.
- RADIATION HAZARD! Incorrectly attached cables may result in hazardous radiation exposure.

Caution! If not avoided, the following could result in minor or moderate injury.

- Before inspecting the fiber optic cable, turn off the laser module breakers.
- RADIATION HAZARD! Use of controls or adjustments, or performing procedures other than those specified may result in hazardous radiation exposure.
- Adjust boresight with low light levels from a single laser module.

Light intensity hazard distance

This projector has been classified as Risk Group 3 as per the IEC62471 standard due to possible hazardous optical and thermal radiation being emitted.

Warning! If not avoided, the following could result in serious injury.

- PERMANENT/TEMPORARY BLINDNESS HAZARD! No direct exposure to the beam must be permitted. Class 1 Laser Product - Risk Group 3 according to IEC 60825-1:2014 and IEC 62471-5:2015.
- PERMANENT/TEMPORARY BLINDNESS HAZARD! Operators must control access to the beam within the hazard distance or install the product at the height that prevents exposure of spectators' eyes within the hazard distance. The hazard zone must be no lower than 3.0 meters (9.8 feet) above the floor and the horizontal clearance to the hazard zone must be a minimum 2.5 meters (8.2 feet).
- EXTREME BRIGHTNESS! Do not place reflective objects in the product light path.

The following show the zones for ocular and skin hazard distances.

Copyright © 2025 Christie Digital Systems USA, Inc. All rights reserved.
If printed, please recycle this document after use.

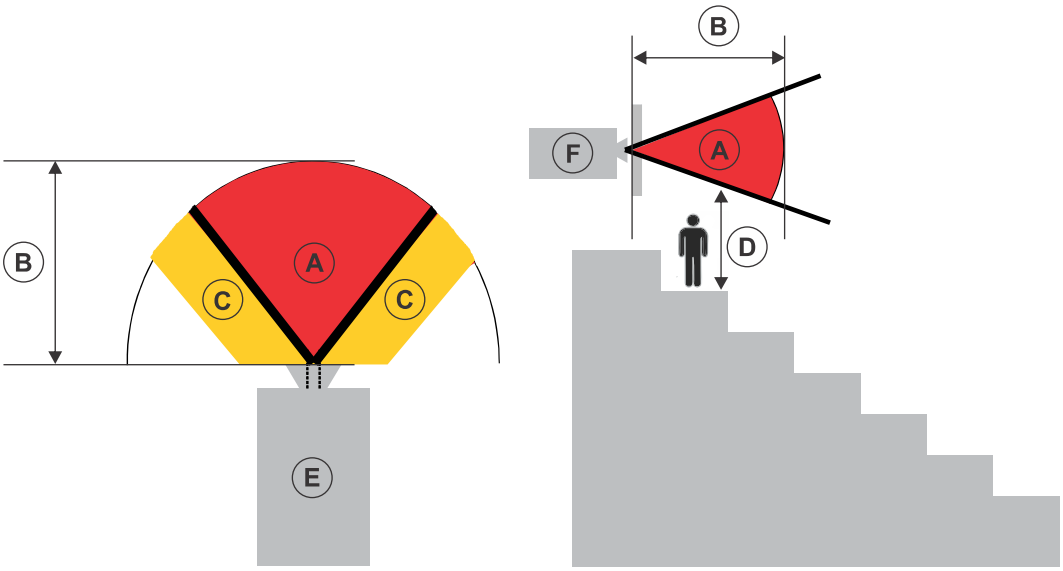

- A—Hazard zone. The region of space where the projection light from the projector is above emission limits for Risk Group 2. The light intensity may cause eye damage after a momentary or brief exposure (before a person can avert their eyes away from the light source). The light may cause skin burns to occur.
- B—Hazard distance. Operators must control access to the beam within the hazard distance or install the product preventing potential exposure of the spectators' eyes from being in the hazard distance.
- C—No access zone. Horizontal clearance of the no access zone must be a minimum of 2.5 meters (8.2 feet).
- D—Vertical distance to hazard zone. The hazard zone must be no lower than 3.0 meters (9.8 feet) above the floor.

  If the vertical distance to hazard zone requirement (Zone D) is satisfied, the horizontal clearance distance (Zone C) is not needed.
- E—Represents the top view of the projector.
- F—Represents the side view of the projector.

The following provides the hazard distance for the Christie projector lens with the zoom adjusted to its most hazardous position.

Lens type	4K	2K	Part number
DLP CINE 4K fixed	0.72:1	—	144-110103-XX
High brightness fixed	0.9:1	1.0:1	38-809071-XX
DLP CINE high brightness zoom	1.13-1.66:1	1.25-1.83:1	108-342100-XX
	1.31-1.85:1	1.45-2.05:1	108-335102-XX
	1.45-2.17:1	1.6-2.4:1	108-336103-XX
	1.63-2.71:1	1.8-3.0:1	108-337104-XX
	1.95-3.26:1	2.15-3.6:1	108-338105-XX

Copyright © 2025 Christie Digital Systems USA, Inc. All rights reserved.
If printed, please recycle this document after use.

Lens type	4K	2K	Part number
DLP CINE high contrast zoom	1.13-1.66:1	1.25-1.83:1	152-117100-XX
	1.31-1.85:1	1.45-2.05:1	152-118101-XX
	1.45-2.17:1	1.6-2.4:1	152-119102-XX
	1.63-2.71:1	1.8-3.0:1	152-120104-XX
	1.95-3.26:1	2.15-3.6:1	108-404109-XX
DLP CINE 4K premium	1.13-1.72:1	—	163-141107-XX
	1.35-1.84:1	—	163-142108-XX
	1.45-2.10:1	—	163-143109-XX
	1.65-2.70:1	—	163-144100-XX

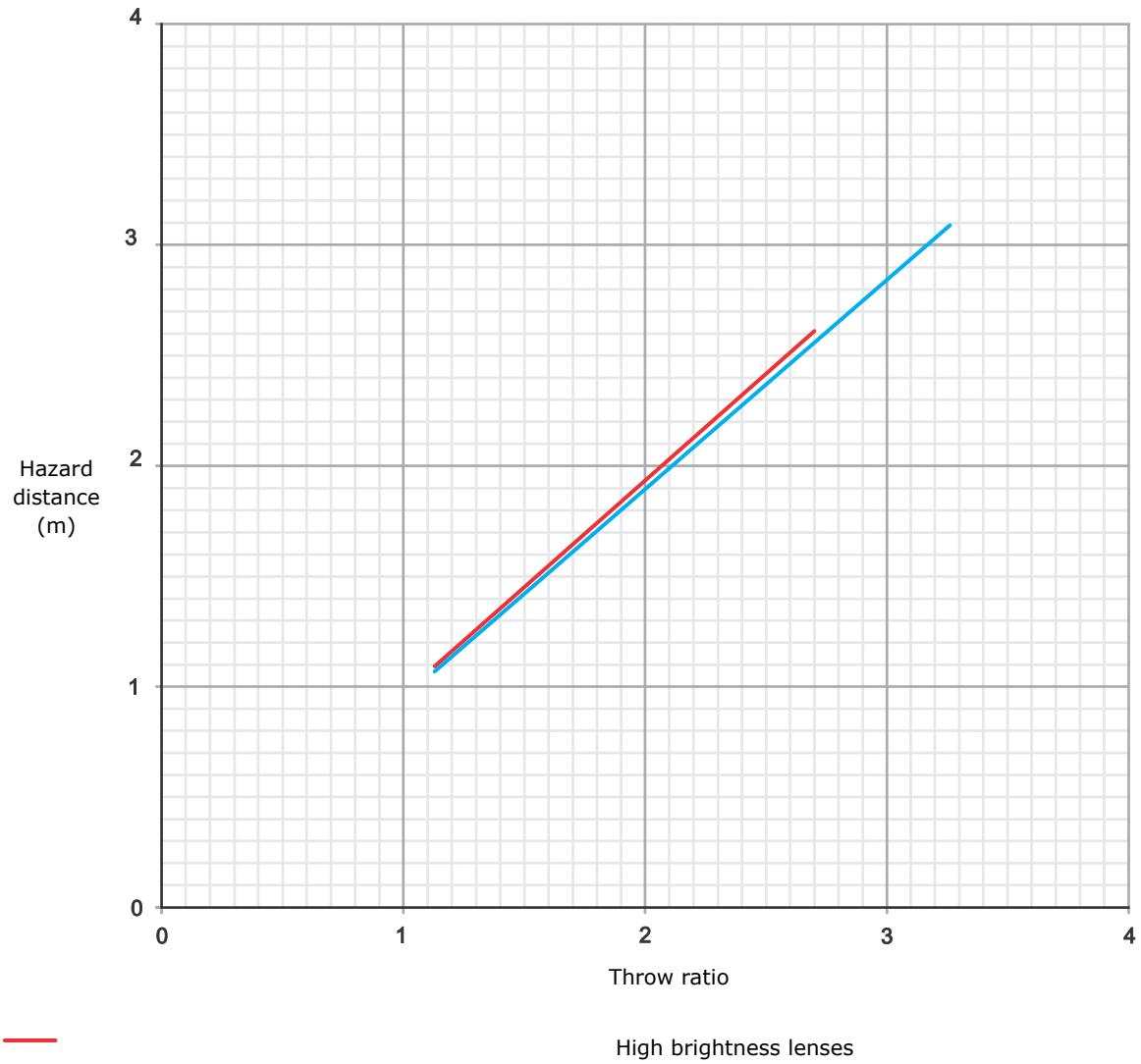

Copyright © 2025 Christie Digital Systems USA, Inc. All rights reserved.
If printed, please recycle this document after use.

High contrast lenses

Due to the requirements of IEC 62471-5, a minimum of 1 meter hazard distance must be maintained.

For Installations in the United States

The following must be in place for laser-illuminated projector installations in the United States:

- Any human access to the hazard zone, if applicable, must be restricted by barriers to enforce the no access zone.
- Permanent show installations containing Risk Group 3 laser-illuminated projectors must meet the following conditions:
  - Installed by Christie or by Christie-authorized and trained installers.

    Refer to the EXTERNAL - Laser safety awareness training (Course code: CS-ELSA-01) on the *http://www.christieuniversity.com* site.
  - Performed according to instructions provided by Christie.
  - Make sure the projection system is securely mounted or immobilized to prevent unintended movement or misalignment of the projections.
- A copy of the FDA variance approval letter must be with the operator or other responsible individual.
- Temporary show installations containing Risk Group 3 laser-illuminated projectors may be installed by Christie or sold or leased only to valid laser light show variance holders (laser light show manufacturers) for image projection applications. Such manufacturers may currently hold a valid variance for production of Class IIIb and IV laser light shows and/or for incorporation of the Risk Group 3 laser-illuminated projectors into their shows. This requirement applies also to dealers and distributors of these laser-illuminated projectors.
- For temporary installations, the FDA variance holder must maintain complete records of all show itineraries with dates, locations, operator name, and contact information clearly and completely identified.
- The Christie Laser Projection System Installation Checklist must be fully completed after the installation and sent to *lasercompliance@christiedigital.com*. A copy can remain on-site. This checklist can be found as a separate document in the accessory box with the manual.
- Certain US states have additional laser regulatory requirements. Contact *lasercompliance@christiedigital.com* for additional regulatory requirements.

Product labels

Learn about the labels that may be used on the product. Labels on your product may be yellow or black and white.

General hazards

Hazard warnings also apply to accessories once they are installed in a Christie product connected to power.

Copyright © 2025 Christie Digital Systems USA, Inc. All rights reserved.
If printed, please recycle this document after use.

Fire and Shock Hazard	
	To prevent fire or shock hazards, do not expose this product to rain or moisture. Do not alter the power plug, overload the power outlet, or use it with extension cords. Do not remove the product enclosure. Only Christie qualified technicians are authorized to service the product.

Electrical Hazard	
	Risk of electric shock. Do not remove the product enclosure. Only Christie qualified technicians are authorized to service the product.

Warning! If not avoided, the following could result in death or serious injury.

Electric shock hazard. To avoid personal injury, disconnect all power sources before performing maintenance or service.

Electrocution hazard. To avoid personal injury, always disconnect all power sources before performing maintenance or service procedures.

Optical radiation hazard. To avoid personal injury, never look directly at the light source.

Laser hazard. To avoid personal injury, avoid eye or skin exposure to direct or scattered radiation.

Caution! If not avoided, the following could result in minor or moderate injury.

Hot surface hazard. To avoid personal injury, allow the product to cool for the recommended cool down time before touching or handling for maintenance or service.

Moving parts hazard. To avoid personal injury, keep hands clear and loose clothing tied back.

Notice. If not avoided, the following could result in property damage.

General hazard.

Not for household use.

Copyright © 2025 Christie Digital Systems USA, Inc. All rights reserved.
If printed, please recycle this document after use.

Mandatory action

Caution! If not avoided, the following could result in minor or moderate injury.

SHOCK HAZARD! Disconnect all power sources before performing maintenance or service procedures.

Consult the service manual.

Electrical labels

Indicates the presence of a protective earth ground.

Laser labels

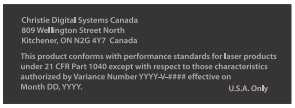

FDA laser variance (US projectors only)

This product is in conformity with performance standards for laser products under 21 CFR 1040, except with respect to those characteristics authorized by Variance Number 2019-V-0640 effective on March 8, 2019.

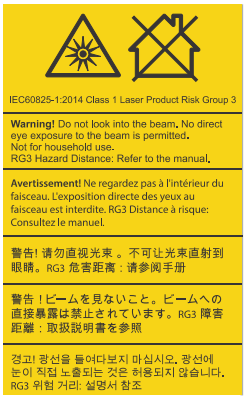

Indicates a light hazard. Do not look directly into the lens. The extreme high brightness can cause permanent eye damage. Class 1 Laser Product - Risk Group 3 according to IEC 60825-1: 2014 and IEC 62471-5:2015

Indicates Class 4 laser radiation when open. Avoid eye or skin exposure to direct or scattered radiation.

Indicates the product is certified for use with the listed Christie-supplied laser illumination sources.

Copyright © 2025 Christie Digital Systems USA, Inc. All rights reserved.
If printed, please recycle this document after use.

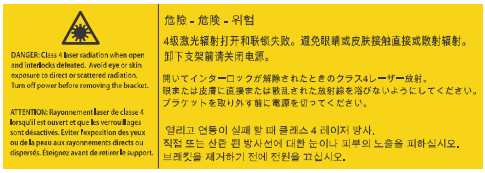

Indicates a danger Class 4 laser radiation when open and interlocks are defeated. Avoid eye or skin exposure to direct or scattered radiation. Turn off power before removing the bracket.

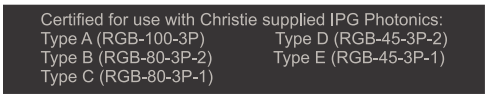

Indicates the product is certified for use with the listed Christie-supplied laser illumination sources.

Additional safety hazards

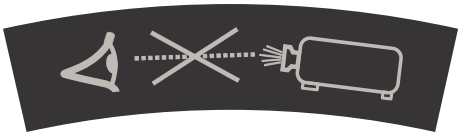

Do not look directly into the lens. The extremely high brightness can cause permanent eye damage.

Indicates high leakage current. Earth connection essential before connecting the power supply.

List of components

Verify all components were received with the projector.

- Power cord
- IR remote keypad
- Tools

Laser illumination source specifications

Learn about the approved Christie-supplied laser illumination sources for Christie Eclipse.

Christie-supplied approved laser illumination sources

Christie-supplied laser illumination source	Part number
Type A	
Laser source type A, 10 m	168-101103-XX
Laser source type A, 20 m	168-101114-XX
Laser source type A, 30 m	168-101125-XX
Laser source type A, 50 m	168-101136-XX
Type C	
Laser source type C, 8 m	168-107109-XX

Copyright © 2025 Christie Digital Systems USA, Inc. All rights reserved.
If printed, please recycle this document after use.

Christie-supplied laser illumination source	Part number
Laser source type C, 10 m	168-107110-XX
Laser source type C, 20 m	168-107121-XX
Laser source type C, 30 m	168-107132-XX
Laser source type C, 50 m	168-107143-XX
Type D	
Laser source type D, 8 m	168-108100-XX
Laser source type D, 10 m	168-108111-XX
Laser source type D, 20 m	168-108122-XX
Laser source type D, 30 m	168-108133-XX
Laser source type D, 50 m	168-108144-XX
Type E	
Laser source type E, 8 m	168-109101-XX
Laser source type E, 10 m	168-109112-XX
Laser source type E, 20 m	168-109123-XX
Laser source type E, 30 m	168-109134-XX
Laser source type E, 50 m	168-109145-XX

Physical specifications

Description	Dimensions
Width	778 mm (30.63 inches)
Depth	803 mm (31.61 inches)
Height	690 mm (27.17 inches)
Weight	150 kg (330.7 lbs)

Environment specifications

Parameter	Requirement
Operating ambient temperature	10 to 35°C (50 to 95°F)
Relative humidity	10 to 85%*
Storage temperature	-20 to 60°C (-4 to 140°F)

* Noncondensing

Copyright © 2025 Christie Digital Systems USA, Inc. All rights reserved.
If printed, please recycle this document after use.

Electrical specifications

Parameter	Requirement
Rated voltage	200-240 VAC, single phase
Line frequency	50/60 Hz
Maximum power consumption	5 kW

Chiller specifications

Learn the specifications required for the chiller used to cool the laser illumination source.

Characteristics	Minimum	Typical	Maximum
Coolant	20% propylene glycol with additives, 80% distilled water		
Coolant temperature*	19°C (66°F)	22°C (71.6°F)	25°C (77°F)
Coolant temperature stability	—	0.1°C	0.5°C
Laser cold start temperature	19°C (66°F)	—	—
Warm up time	—	5 minutes	15 minutes
Coolant pressure	1.5 bar	—	3.5 bar
Coolant flow rate	20 liters/minute	—	—

* Always above dew point.

When the projectors are used in a projection array, the chiller specifications are between 19°C (66°F) to 22°C (71.6°F) with a 0.1°C stability.

Chiller cooling capacity

Laser illumination source	Chiller cooling capacity
Type A	Built before January 1, 2020—5.5 kW Built after January 1, 2020—4.5 kW
Type C	4.0 kW
Type D	4.0 kW
Type E	3.0 kW

Accessories

Learn about the accessories (sold separately) available for the projector.

Lenses

Lens type	4K	2K	Part number
DLP CINE 4K fixed	0.72:1	—	144-110103-XX

Copyright © 2025 Christie Digital Systems USA, Inc. All rights reserved.
If printed, please recycle this document after use.

Lens type	4K	2K	Part number
High brightness fixed	0.9:1	1.0:1	38-809071-XX
DLPCINE high brightness zoom	1.13-1.66:1	1.25-1.83:1	108-342100-XX
	1.31-1.85:1	1.45-2.05:1	108-335102-XX
	1.45-2.17:1	1.6-2.4:1	108-336103-XX
	1.63-2.71:1	1.8-3.0:1	108-337104-XX
	1.95-3.26:1	2.15-3.6:1	108-338105-XX
DLPCINE high contrast zoom	1.13-1.66:1	1.25-1.83:1	152-117100-XX
	1.31-1.85:1	1.45-2.05:1	152-118101-XX
	1.45-2.17:1	1.6-2.4:1	152-119102-XX
	1.63-2.71:1	1.8-3.0:1	152-120104-XX
	1.95-3.26:1	2.15-3.6:1	108-404109-XX
DLPCINE 4K premium	1.13-1.72:1	—	163-141107-XX
	1.35-1.84:1	—	163-142108-XX
	1.45-2.10:1	—	163-143109-XX
	1.65-2.70:1	—	163-144100-XX

Filters and coolant

Description	Part number
Air intake filter	003-006488-XX
LAD filter—3-pack	03-001982-54P
Harsh environment filter	003-006555-XX
Coolant Propylene Glycol 740	003-005179-XX

Line cords

Description	Part number
250 V/10 A C13 2.5 m cord—Australia	108-392105-XX
250 V/10 A C13 3.0 m cord—China	108-373104-XX
250 V/10 A C13 2.5 m cord—Europe	108-390103-XX
250 V/15 A C13 3.0 m cord—Japan	108-369109-XX
250 V/10 A C13 2.5 m cord—New Zealand	108-487100-XX
12.00 250 V/13 A black cord—North America	108-381103-XX
250 V/10 A C13 2.5 m cord—United Kingdom	108-388100-XX

Copyright © 2025 Christie Digital Systems USA, Inc. All rights reserved.
If printed, please recycle this document after use.

Other accessories

Description	Part number
IR remote	003-120918-XX
Christie Mystique™	900-100285-XX 900-100286-XX 900-100274-XX 900-100275-XX
Christie Twist™ Premium	156-002103-XX 156-102104-XX
Christie Twist™ Pro	156-001102-XX 156-101103-XX
Driver set	• 012-102820-XX • 012-102916-XX • 012-102005-XX • 012-101124-XX • 012-102004-XX
Fiber Cleaning kit	003-006829-XX
Rack Stand Upgrade kit	003-006429-XX
Rack stand extension leg	003-006430-XX
Quick Fastener kit (10 pieces	003-107772-XX

Technical support

Technical support for Christie Enterprise products is available at:

- North and South America: +1-800-221-8025 or *Support.Americas@christiedigital.com*
- Europe, Middle East, and Africa: +44 (0) 1189 778111 or *Support.EMEA@christiedigital.com*
- Asia Pacific (*support.apac@christiedigital.com*):
  - Australia: +61 (0)7 3624 4888 or *tech-Australia@christiedigital.com*
  - China: +86 10 6561 0240 or *tech-supportChina@christiedigital.com*
  - India: +91 (80) 6708 9999 or *tech-India@christiedigital.com*
  - Japan: 81-3-3599-7481
  - Singapore: +65 6877-8737 or *tech-Singapore@christiedigital.com*
  - South Korea: +82 2 702 1601 or *tech-Korea@christiedigital.com*

Copyright © 2025 Christie Digital Systems USA, Inc. All rights reserved.
If printed, please recycle this document after use.

Installation and setup

Learn how to install, connect, and optimize the projector display.

Site requirements

To safely install and operate the projector, the installation location must have restricted access for authorized personnel only and meet these minimum requirements.

Physical environment

Understand the physical environment requirements that apply to all Christie Eclipse components.

Notice. If not avoided, the following could result in property damage.

- Do not install any portion of the fiber bundle next to a heat source.

The physical environment must meet the following requirements:

	Projector head	Laser module
Physical operating environment		
Minimum ambient temperature	10°C (50°F)	10°C (50°F)
Maximum ambient temperature	30°C (86°F)	25°C (77°F)
Humidity	20% to 60%	—
Physical non-operating environment		
Minimum ambient temperature	-20°C (-4°F)	-20°C (-4°F)
Maximum ambient temperature	65°C (149°F)	60°C (140°F)
Humidity	20% to 60%	—
Altitude	0 to 3000 meters (0 to 9842.5 feet)	—

For information on the physical environment requirements for the laser unit and chiller unit, refer to the product documentation provided by the equipment manufacturer.

Power requirements

Learn the power requirements for the projector.

Item	Description
Voltage	200-240 VAC single phase
Current rating	5 A

Copyright © 2025 Christie Digital Systems USA, Inc. All rights reserved.
If printed, please recycle this document after use.

Item	Description
Line frequency	50/60 Hz

Projector components

Identify the main components of the projector.

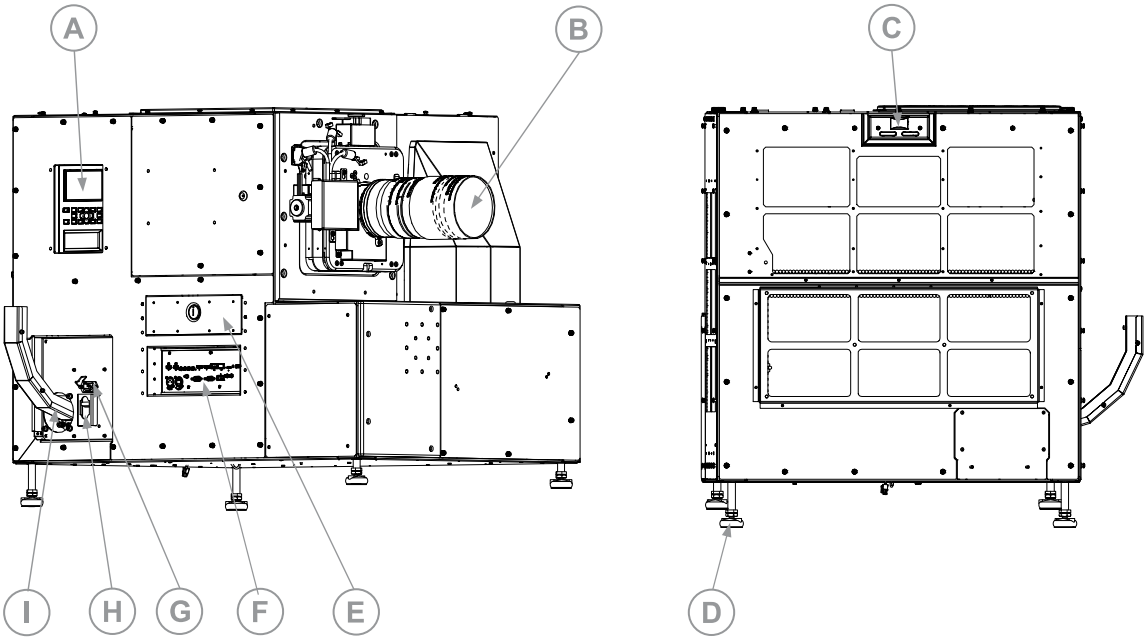

ID	Component	Description
A	Display panel and keypad	Displays the projector menus and status. The keypad controls the projector.
B	Projection lens	A variety of lenses can be used with the projector. Available lenses are listed in the .
C	LED status indicator and rear IR	Indicates power status and receives transmissions from the IR remote.
D	Adjustable feet	Raises or lowers these feet when positioning the projector to make sure it is level on all sides so the displayed image appears rectangular without any keystone.
E	Tool box	Provides tools for Christie qualified technicians.
F	Communication and input panel	Connects media sources to either the ports on the option cards or the IMXB.
G	AC input	For use with projector power cord.
H	Power on/off switch	Switch to power the projector on or off.
I	Fiber optic bundle	Transmits the collected laser light to the projector.

Copyright © 2025 Christie Digital Systems USA, Inc. All rights reserved.
If printed, please recycle this document after use.

IR/wired remote keypad

The IR/wired remote keypad controls the projector by way of either wireless communications from a battery-powered infrared (IR) transmitter or a wired interface.

Warning! If not avoided, the following could result in death or serious injury.

- EXPLOSION HAZARD! Replacement battery must be of the correct type.
- EXPLOSION HAZARD! Dispose of the battery according to local area regulations.

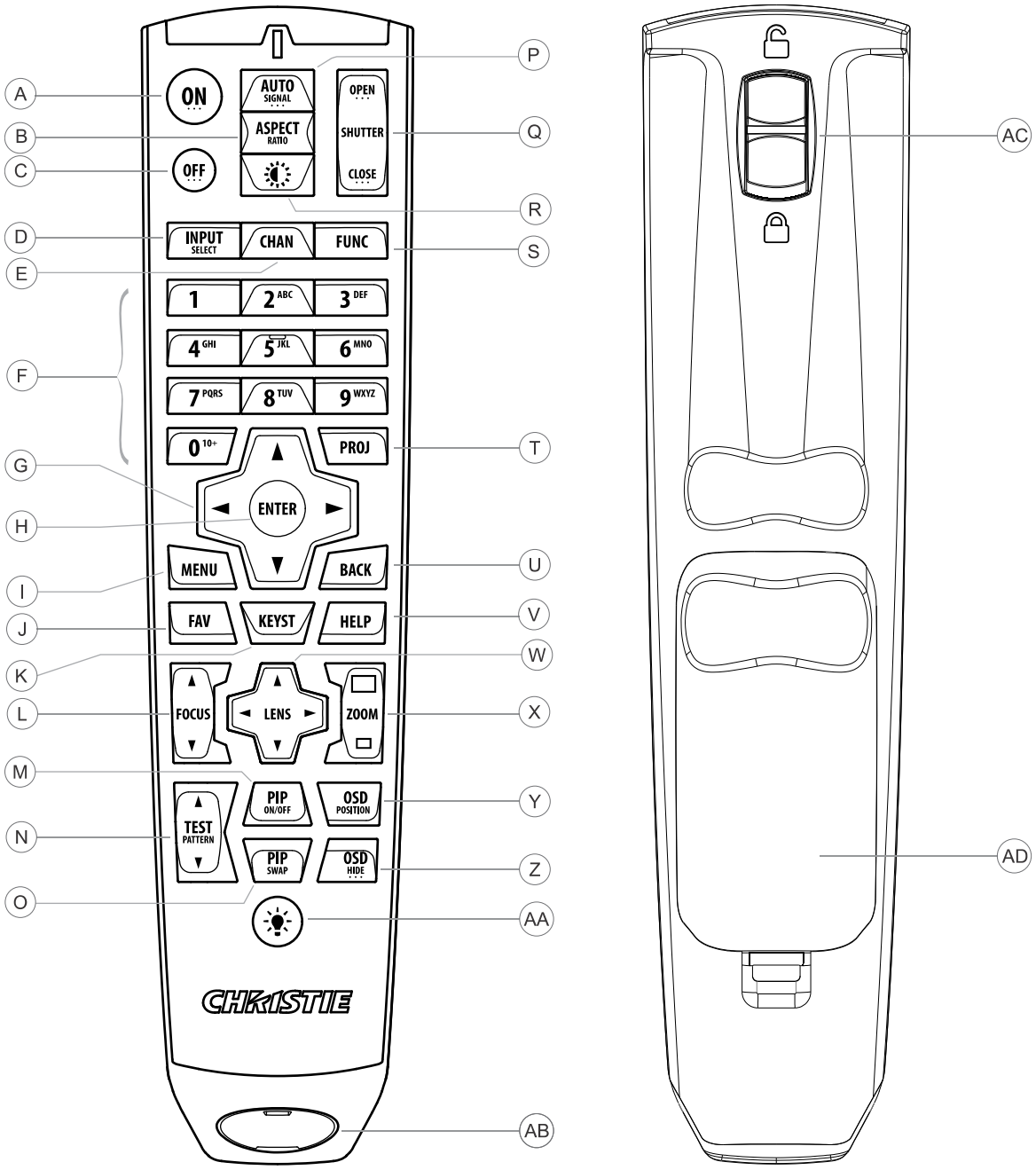

Copyright © 2025 Christie Digital Systems USA, Inc. All rights reserved.
If printed, please recycle this document after use.

Button	Description
A	Powers on the projector light source.
B	Opens the aspect ratio dialog.
C	Turns off the light source and puts the projector in standby.
D	Selects an active or inactive input on any slot.
E	Not supported.
F	Enter a number, such as menu, item index or value.
G	Use the arrows to navigate within a menu or to adjust settings.
H	Selects a highlighted menu item and changes or accepts a value.
I	Toggles the menus on/off.
J	Not supported.
K	Opens the keystone dialog.
L	Adjusts the lens focus.
M	Not supported.
N	Displays a test pattern.
O	Not supported.
P	Optimizes the image automatically.
Q	Opens or closes the shutter.
R	Not supported.
S	Initiates a custom action when a number is selected.
T	Selects a projector in multi-projector installations.
U	Returns to the previous menu level or exits menus if at the top level.
V	Displays context-sensitive help.
W	Use the arrows to adjust the lens offset.
X	Adjusts the lens zoom.
Y	Opens the on-screen display position menu.
Z	Shows or hides the on-screen display menus.
AA	Turns the remote backlight on.
AB	Male 3-pin XLR connector used for wired option.
AC	Locks/unlocks the keypad.
AD	Battery door—When replacing a battery, dispose of the used battery or batteries according to local area regulations.

Copyright © 2025 Christie Digital Systems USA, Inc. All rights reserved.
If printed, please recycle this document after use.

Display panel components

Identify the main components of the display panel (also known as the home page).

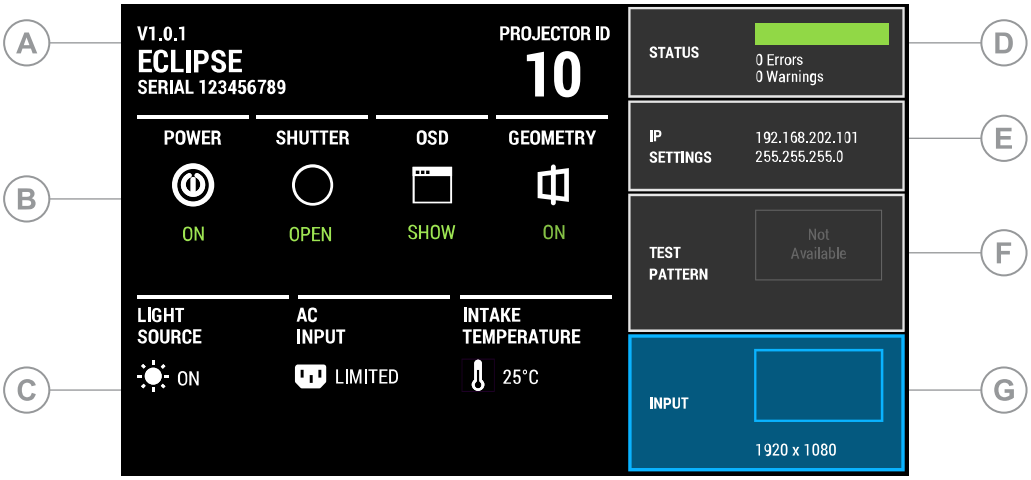

ID	Component	Description
A	Projector Information	Provides information about the projector such as the projector name, serial number, software version, and projector ID.
B	Projector and Component Controls	Indicates the states of the projector and its components.
C	Power and Temperature	Indicates the light source mode, power mode, and intake temperature.
D	Status	Contains information about the health of the projector including the number of warnings and errors. Provides access to the status system.
E	IP Settings	Displays the IP address and subnet values. Provides access to changing the IP settings.
F	Test Pattern	Displays the currently selected test pattern. If no test pattern is selected, Off is displayed. Provides access to the list of test patterns.
G	Input	Displays the signal for the currently selected input. Provides access to the list of input signals.

Required tools

Make sure the following tools are available during the installation.

- 12 inch screwdrivers: Phillips #2 (magnetic) and flat
- 2.5 mm, 3 mm, and 5 mm hex drivers
- Adjustable wrench
- Step stool

Copyright © 2025 Christie Digital Systems USA, Inc. All rights reserved.
If printed, please recycle this document after use.

- Powder-free N-DEX gloves
- Clean dry air (CDA)

Workflow: Installing and setting up the Christie Eclipse system

Identify the recommended order for installing and setting up the components of the Christie Eclipse system.

These tasks detail the steps for installing both single (3P) and dual (6P) systems. For the dual system, repeat the tasks for both the left-eye and right-eye systems, making sure you connect the correct light source to the correct projector head.

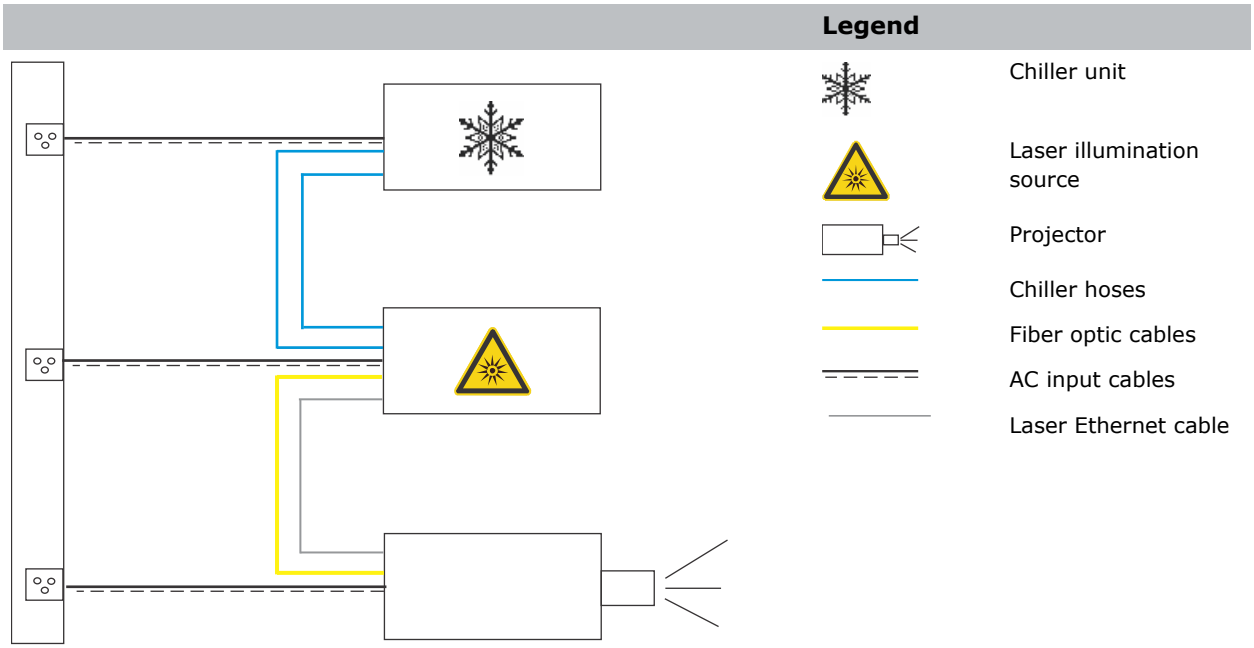

The Christie Eclipse projector head provides all configuration and control for the laser illumination source. Never connect a laptop to the laser illumination source unless directed by Technical Support.

1. *Set up the projector head* (on page 26).
   a) Position the projector as perpendicular to the screen as possible, even if significantly above the screen center.
   b) *Install the zoom motor kit on the lens* (on page 28).
   c) *Install the projection lens* (on page 31).
   d) *Remove the reservoir plug* (on page 32).
   e) *Connect the projector head to AC power* (on page 36).
   f) *Align the IOS1 fold mirror* (on page 34)
2. *Set up the laser illumination source* (on page 36).

Copyright © 2025 Christie Digital Systems USA, Inc. All rights reserved.
If printed, please recycle this document after use.

a) Position the laser illumination source on level ground and make sure the fiber optic cable is routed in a way to avoid any damage.

b) *Install the J33 terminal block* (on page 36) on the laser illumination source.

c) To protect the fiber optic cable, *install the fiber connector safety cover* (on page 38) on the fiber connector.

d) *Connect the fiber optic cable* (on page 41) from the laser illumination source to the projector head.

e) Make sure a qualified electrician connects the AC power to the laser illumination source.

3. *Set up the chiller unit* (on page 45).
4. *Perform initial system start-up* (on page 45) or *turn on the system* (on page 47).
5. *Calibrate the lens motor* (on page 59).
6. Adjust the image.
   a) *Rotate the integrator rod* (on page 55).
   b) Adjust the *horizontal* (on page 55) and *vertical* (on page 56) boresight.
   c) *Adjust the convergence* (on page 57).
   d) *Adjust images with full light* (on page 59).
7. *Complete the installation checklist* (on page 64).

Workflow: Setting up the projector head

Identify the recommended order for setting up the projector head.

1. *Position the projector* (on page 26) as perpendicular to the screen as possible, even if significantly above the screen center.

   When a particularly short throw distance combines with a wide screen, you may have to forfeit some aim and stay more perpendicular to the screen. In such cases, some lens offset can reduce the keystone distortion.
2. *Install the zoom motor kit on the lens* (on page 28).
3. *Install the projection lens* (on page 31).
4. *Remove the reservoir plug* (on page 32).
5. *Connect the projector head to AC power* (on page 36).
6. *Align the IOS1 fold mirror* (on page 34).

Lifting and positioning the projector

Safely lift and position the projector in the location where it will be used.

To tilt the projector more than 15° up or down, remove the feet and mount the projector to a custom engineered mounting system designed specifically for this projector and installation. If the projector is to be installed beyond 15° of tilt, contact the Christie Custom Fulfillment team for additional consultation.

Warning! If not avoided, the following could result in death or serious injury.

- Do not install or operate the projector in any position that does not meet the stated product specifications for alignment and orientation.

Copyright © 2025 Christie Digital Systems USA, Inc. All rights reserved.
If printed, please recycle this document after use.

1. Position the projector so it is centered and parallel with the screen. If space is limited, aim the projector slightly off-center and use lens offset to center the image on the screen.
2. To adjust the vertical position of the projector, extend or retract the adjustable feet on the bottom of the projector using the adjustable knobs on the feet.

   only applies to a projector being installed on a flat pedestal?

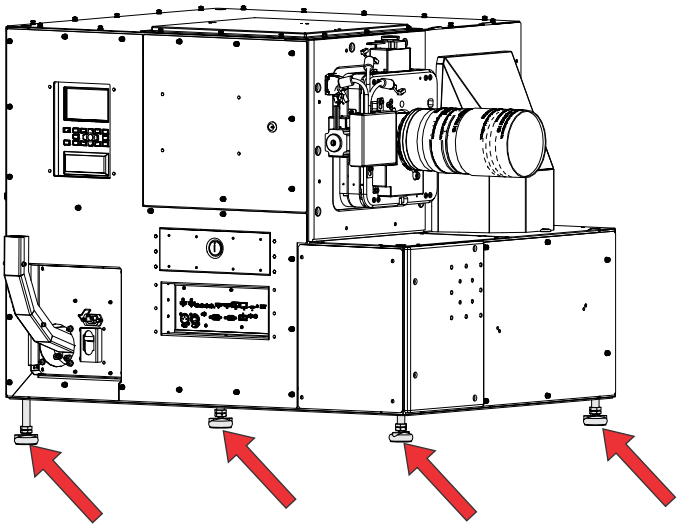

3. Once the required adjustment is made, using a wrench, tighten the lock nut against the bottom of the projector.

Copyright © 2025 Christie Digital Systems USA, Inc. All rights reserved.
If printed, please recycle this document after use.

Projector sides

While positioned behind the projector and facing towards the screen, the right side (A) of the projector is on the right and the left side (B) is on the left.

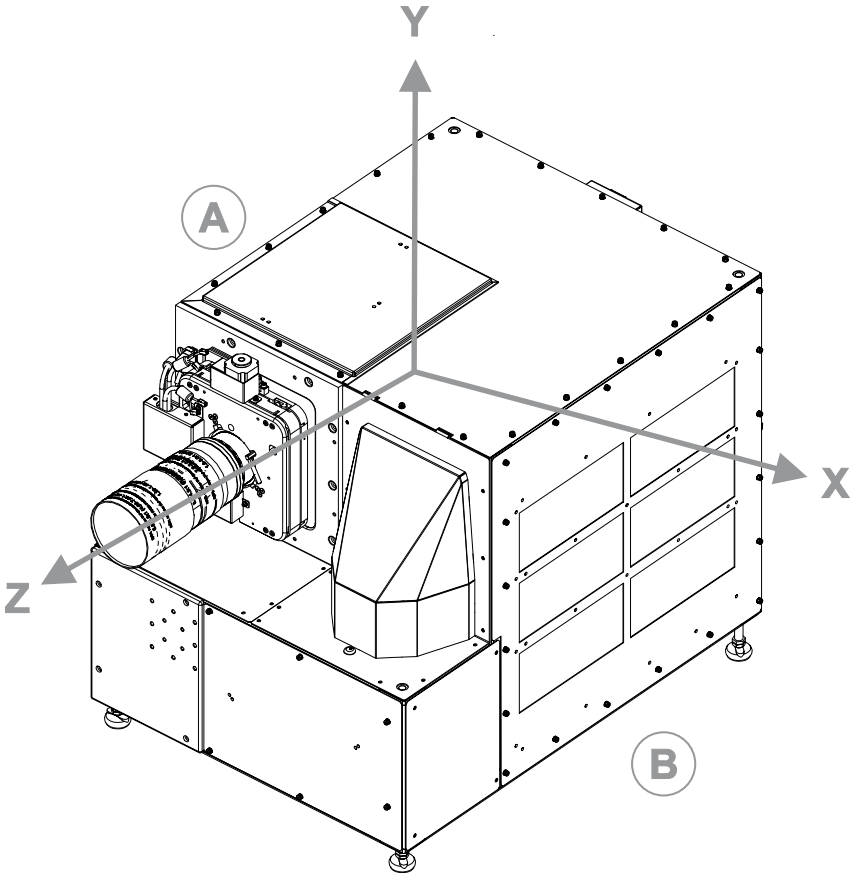

- Z-direction: projection axis originates at the center of the image plane
- X-direction: horizontal left/right with respect to the image plane
- Y-direction: vertical up/down with respect to the image plane

Installing the zoom motor kit on the lens

The zoom motor kit allows for motorized adjustment of the lens.

1. Remove the zoom motor kit from its packaging.
2. Remove the two screws securing the zoom motor cover to the zoom motor assembly.
3. Remove and set aside the zoom motor cover and screws.

Copyright © 2025 Christie Digital Systems USA, Inc. All rights reserved.
If printed, please recycle this document after use.

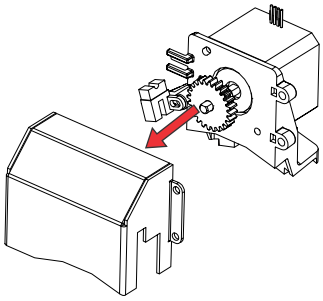

4. Hold the zoom motor assembly in position and slide the zoom motor clamp downward onto the lens and over the base of the zoom motor assembly.
5. Position the zoom motor clamp locking screw next to the motor control assembly away from the lens locking lever.

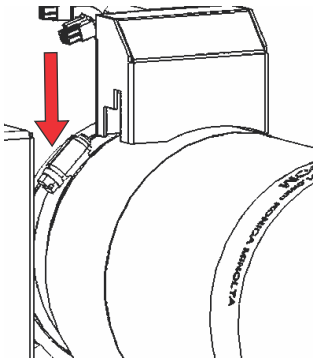

The image shows the zoom motor cover in position to assist with locating the locking screw.

6. To secure the zoom motor assembly to the lens, tighten the zoom motor clamp locking screw.

   Allow enough movement for adjustments.
7. Verify the center of the zoom motor assembly sensor (A) is centered over the zoom sensor flag (B) on the zoom gear ring.

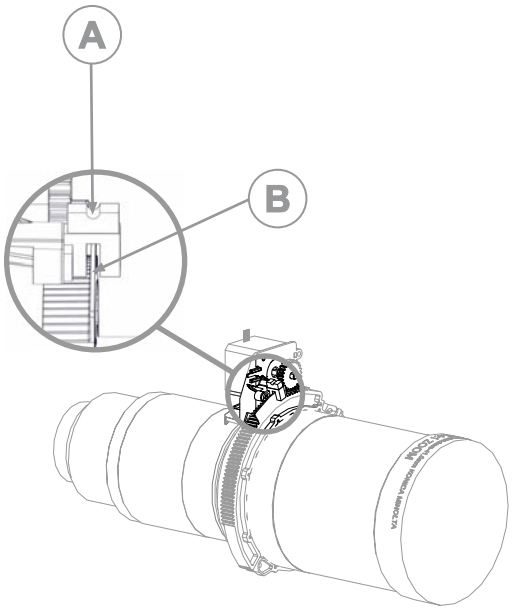

Copyright © 2025 Christie Digital Systems USA, Inc. All rights reserved.
If printed, please recycle this document after use.

8. If necessary, adjust the spacing between the zoom motor assembly sensor and the zoom sensor flag.
   a) Loosen the screw securing the zoom gear ring and move it backward or forward.
   b) Tighten the screw when the adjustment is complete.
9. Verify there is a small gap between the zoom motor assembly teeth and the zoom gear ring teeth.
10. If necessary, adjust the spacing between the zoom motor assembly teeth and the zoom gear ring teeth.
    a) Loosen the zoom motor clamp locking screw and move the zoom motor left or right until you can access the adjustment screws.
    b) Loosen the adjustment screws (A) and (B) and move the zoom motor up or down.

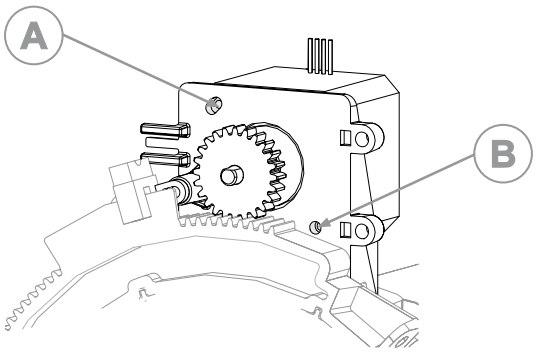

    c) Tighten the adjustment screws.
    d) Reposition the zoom motor assembly and tighten the zoom motor clamp locking screw.
11. Verify the zoom motor shaft is aligned with the lens axis.

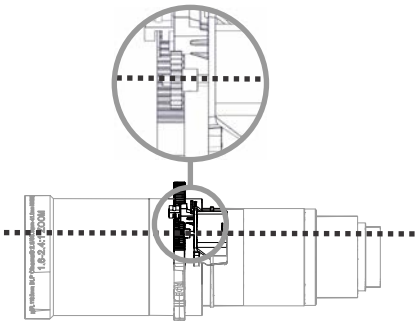

12. Turn the zoom gear ring to its maximum range in both directions and verify the zoom motor assembly teeth contact the zoom gear teeth throughout the full range of adjustment.

    If the teeth do not contact the zoom gear teeth throughout the full range of adjustment, readjust the position of the zoom motor assembly.
13. When all adjustments are complete, tighten the screw on the zoom motor clamp.

Copyright © 2025 Christie Digital Systems USA, Inc. All rights reserved.
If printed, please recycle this document after use.

Installing the lens

The lens must be installed before using the projector.

Caution! If not avoided, the following could result in minor or moderate injury.

- Keep fingers and other body parts away from the moving parts in the product. Tie back long hair, and remove jewelry and loose clothing before manually adjusting the product.
- Motors and fans may start without warning.
- Before opening the projector, set the lasers to minimum power.

Notice. If not avoided, the following could result in property damage.

- Always place the lens cap onto the lens when moving the projector to avoid scratching the lens.
- Remove the lens cap before turning on the product to avoid damaging the lens.

1. Move the lens clamp to the open position.
2. Remove the small lens cap from the rear of the lens.
3. Insert the lens with the zoom motor assembly straight into the lens mount without turning it.
4. Move the lens clamp to the locked position.

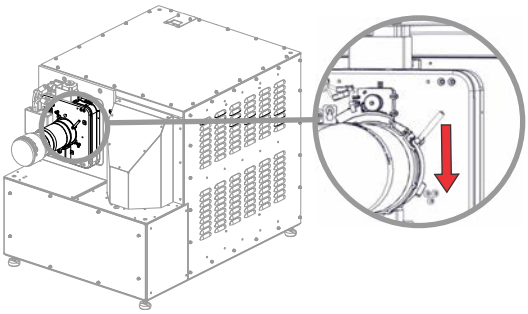

5. Remove the lens cap from the front of the lens.
6. Connect the two zoom motor connectors.

Copyright © 2025 Christie Digital Systems USA, Inc. All rights reserved.
If printed, please recycle this document after use.

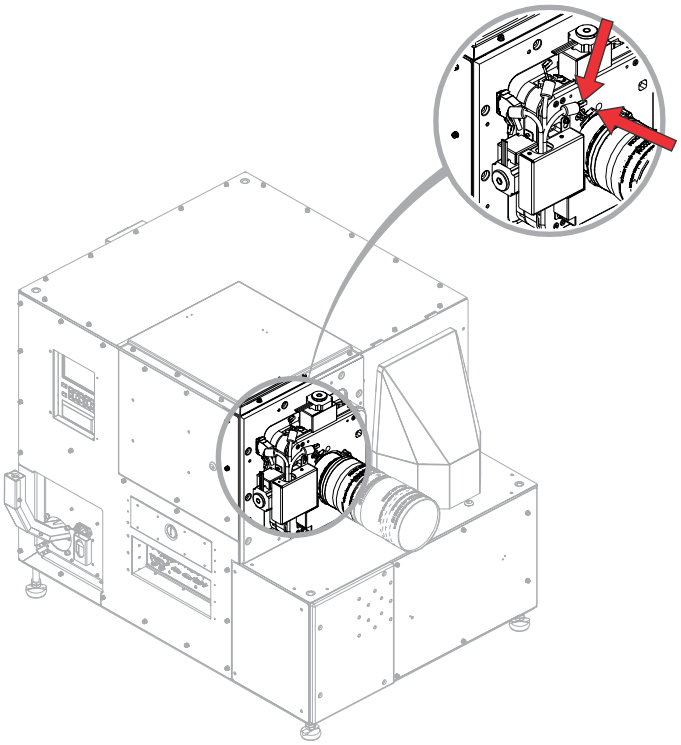

7. Secure the zoom motor cover to the zoom motor with two screws.
8. After installing a new lens:
   - Align the illumination optical system (IOS) 1 mirror.
     For details, see the *Illumination optical system 1 (IOS1) fold mirror adjustment instruction sheet (P/N: 020-103645-XX)*.
   - Adjust *horizontal* (on page 55) and *vertical* (on page 56) boresight.
   - *Perform convergence* (on page 57).

Removing the reservoir plug

Prior to using the projector, remove the plug from the reservoir assembly.

1. To access the 2K liquid cooling pump, remove the rear lower cover:
   a) Remove the three screws along the top of the rear lower cover.

Copyright © 2025 Christie Digital Systems USA, Inc. All rights reserved.
If printed, please recycle this document after use.

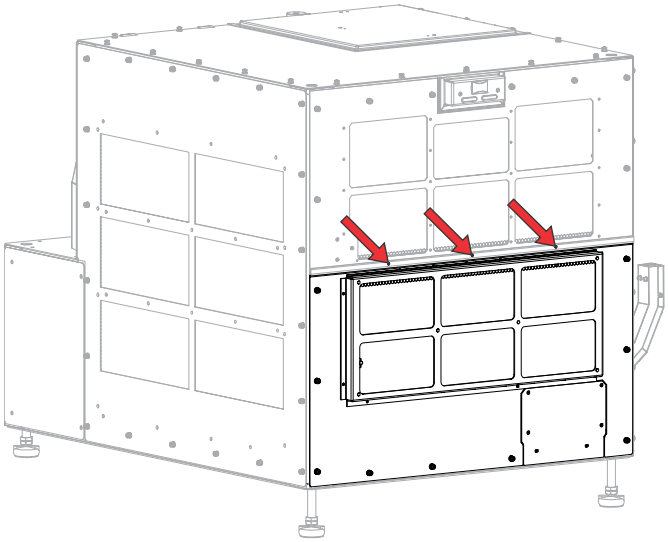

b) Loosen the nine screws and remove the rear lower cover.

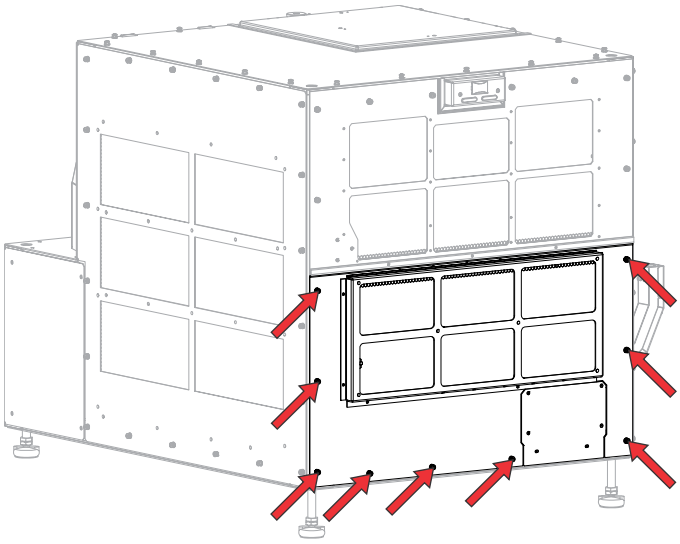

2. Locate the 2K liquid cooling pump.

Copyright © 2025 Christie Digital Systems USA, Inc. All rights reserved.
If printed, please recycle this document after use.

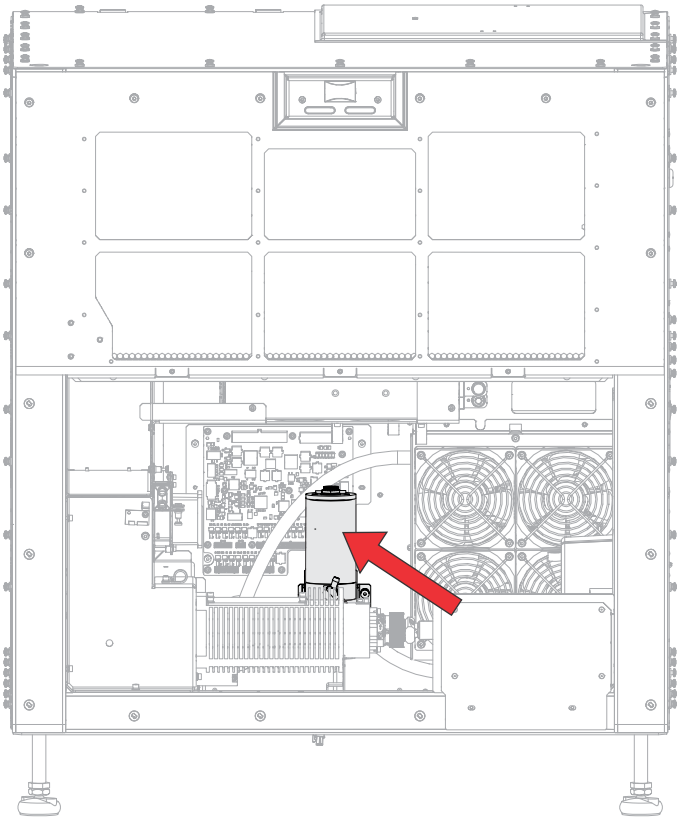

3. Leaving the 2K liquid cooling pump in the projector, remove the plug from the reservoir's cap.

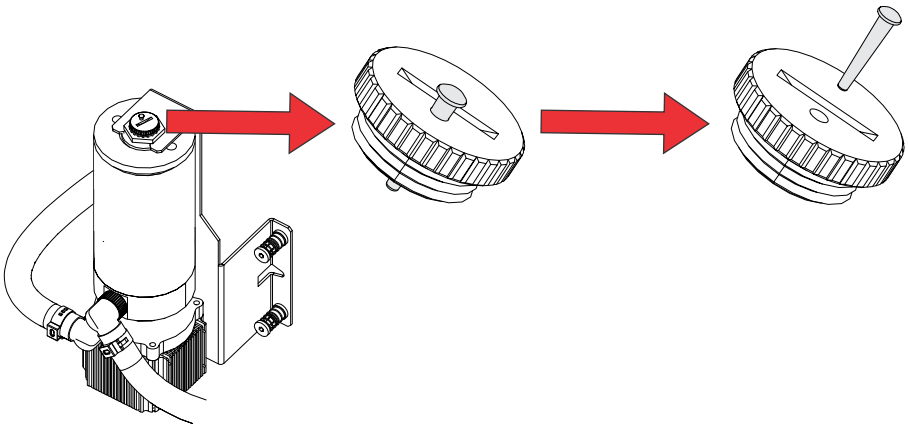

4. Tape the plug to the top of the cap so it is available for reinsertion if the projector is to be transported in the future.

   Alternatively, order a new plug in the Reservoir Cap service kit (P/N: 003-200638-XX).

5. Replace the rear lower cover.

Aligning the illumination optical system 1 (IOS1) fold mirror

During transit of the projector, the alignment of the illumination optical system 1 (IOS1) fold mirror may shift. Use the IOS1 Laser Alignment kit (P/N:152-113106-XX) to check and correct the alignment

Copyright © 2025 Christie Digital Systems USA, Inc. All rights reserved.
If printed, please recycle this document after use.

of the IOS1 fold mirror. The IOS1 fold mirror aligns the fiber optic output onto the entrance of the integrator rod.

Fold mirror adjustment must be completed by trained personnel.

Notice. If not avoided, the following could result in property damage.

- Misalignment of the fold mirror may cause permanent damage to the product.

1. If connected to power, disconnect it and make sure it has sufficiently cooled.
2. Remove the integrator rod.

   For details on removing the integrator rod, see the *Christie Eclipse Service Guide (P/N: 020-103344-XX)*.
3. Insert the alignment target (P/N: 011-107185-XX) into the integrator rod holder.

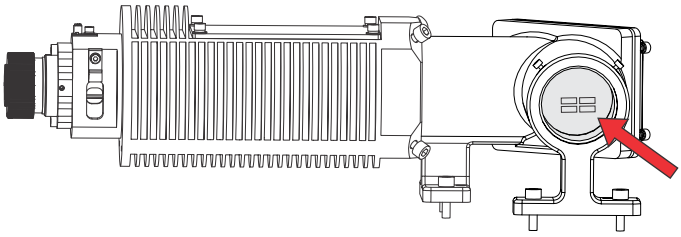

4. If connected, disconnect the fiber optic cable.
5. Place the fiber connector dust cap on the fiber optic cable.
6. Insert the adapter diode into the end of the fiber optic relay.

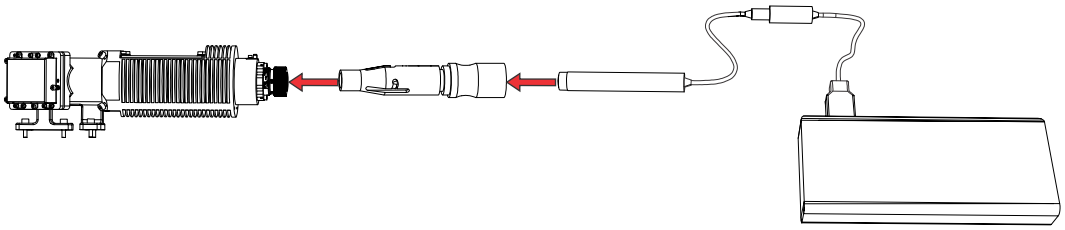

7. Turn on the low-power adapter diode.

   The adapter diode emits a laser spot onto the alignment target.
8. Adjust the three screws on the fold mirror to align the laser spot onto the center of the alignment target (cross-hairs).

   Most adjustments can be done with the two left screws. Only adjust the right screw if an extreme misalignment has occurred.

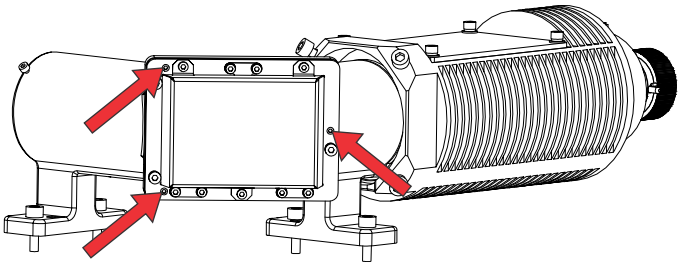

9. Remove the alignment target and adapter diode.
10. Reconnect the laser adapter.
11. Re-install the integrator rod.

Copyright © 2025 Christie Digital Systems USA, Inc. All rights reserved.
If printed, please recycle this document after use.

Connecting the projector to AC power

Plug the projector into the grounded building power supply with an appropriately rated line cord.

Caution! If not avoided, the following could result in minor or moderate injury.

- SHOCK HAZARD! Only use the AC power cord provided with the product or recommended by Christie.

1. Connect one end of the projector power cord to the AC receptacle on the right (positioned behind the projector) panel of the projector.
2. Connect the other end of the power cord to an AC receptacle.

Workflow: Setting up the laser illumination source

Identify the recommended order for setting up the laser illumination source.

1. Position the laser illumination source on level ground and *make sure the fiber optic cable is routed in a way to avoid any damage* (on page 38).
2. *Install the J33 terminal block* (on page 36) on the laser illumination source.
3. To protect the fiber optic cable, *install the fiber connector safety cover* (on page 38) on the fiber connector.
4. *Connect the fiber optic cable* (on page 41) from the laser illumination source to the projector head.
5. *Connect the laser Ethernet cable* (on page 44) from the laser illumination source to the projector head.
6. Make sure a qualified electrician connects the AC power to the laser illumination source.

   For electrical rating information, refer to the license label on the laser illumination source. Additional information is available in the laser illumination source's product documentation.

Installing the J33 terminal block on the laser illumination source

The J33 terminal block on the light illumination source is used for an external interlock E-stop and fire alarm E-stop triggers. The J33 terminal block closes off the connector to the interlock allowing Christie Eclipse to turn on.

As of October 2020, a J33 terminal block and a 30.4 m (100 foot) cable are optionally available with the laser rack to enable the Power key in the remote position. For racks purchased before this date, contact Christie Technical Support for information on upgrading the laser rack to use this feature.

Determine which terminal block and features you require:

- J33 terminal block 1—Self-contained with no external wires and shipped with the projector head packaging. Use this terminal block when manual control and no external E-stop are required. If using the J33 terminal block 1, remote operation or remote E-stop is not available.
- J33 terminal block 2—Includes a 30.4 m (100 foot) cable. Use this terminal block when external control and/or an external E-stop are required.

1. On the laser rack, install either the J33 connector with cable provided with the laser rack or the J33 connector provided with the projector.

Copyright © 2025 Christie Digital Systems USA, Inc. All rights reserved.
If printed, please recycle this document after use.

- J33 terminal block 1—Install the J33 terminal block by tightening the two screws.

J33 terminal block 1 shown here with the location of the mounting screws indicated with the red arrows

- J33 terminal block 2—Install the J33 terminal block with the integrated cable (in the same location as shown above for the J33 terminal block 1) by tightening the two screws and proceed to step 2.

  Terminal block 2 shown below with cable:

Terminal block 2 shown here with cable

Terminate all wires or the projector may not operate.

2. To make use of the remote operation feature (J33 terminal block option 2), terminate the wires for correct operation.

   Each wire has a label indicating what pin it is connected to.

   a) Make sure pins/wires 17 and 20 and 18 and 19 are closed or the projector will not operate in the local or remote position.

      These pins can be connected to a remote E-stop button and/or the remote fire disconnect and/or each circuit closed if the remote E-stop is not required. Keep each circuit isolated from other circuits.

   b) Wire the automation device to provide the ability to maintain a closed circuit between the J33 pins 8 and 9 when the equipment is operating.

      This circuit is used to turn on and off the laser illumination source. When the circuit is open and the key is in the REM position, functionally this is the same as if the key was turned to off.

Copyright © 2025 Christie Digital Systems USA, Inc. All rights reserved.
If printed, please recycle this document after use.

c) Wire the automation device to provide the ability to momentarily close the circuit between the J33 pins 21 and 22.

This circuit is used to turn on the lasers when the key is in the REM position. Functionally it is the same as pressing the green button when the key is in the ON position.

The green button/light illuminates when this contact is closed (if the system is ready); however, the button does not operate as a button. It is only a light when the key is in the REM position.

A momentary 500ms contact closure is required to turn on the lasers with pins 21 and 22.

Protecting the fiber connector

Before placing or setting up any system components, you must install the supplied fiber connector safety cover on the fiber connector to protect the fiber optic cable.

The fiber connector safety cover, wire lanyard, and cable ties, are supplied in the projector package. The fiber connector safety cover provides additional physical protection for the fiber connector to reduce the risk of damage during installation work.

The fiber connector safety cover (safety cover) must be tethered to the fiber optic cable and then placed over the fiber connector and its dust cap. The safety cover and dust cap should be removed only when you are ready to connect the fiber optic cable to the projector.

When handling the fiber optic cable, the minimum bend radius allowed is 150 mm.

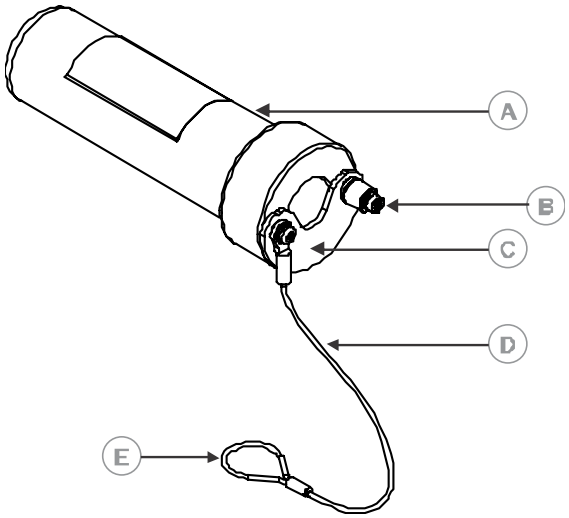

Legend	
A	Fiber connector safety cover
B	Captive screw
C	Cover lid
D	Wire lanyard
E	Eye of wire lanyard

1. Slide a cable tie through the eye of the wire lanyard and loop the cable tie loosely around the fiber optic cable.

Copyright © 2025 Christie Digital Systems USA, Inc. All rights reserved.
If printed, please recycle this document after use.

When attached to the fiber optic cable, make sure the tethered safety cover can be placed over the fiber connector and the cable tie is sufficiently loose to slide the tether up and down the fiber cable.

2. Measure a distance approximately 1650 mm (65 inches) from the end of the fiber connector down the fiber cable.

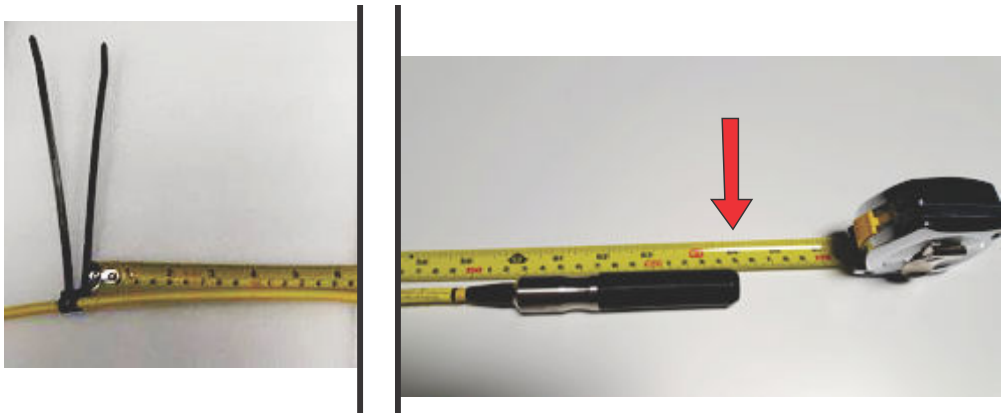

3. At this location, create a stop point by placing one cable tie and tightening it.
4. At this same location, place a second cable tie directly beside the first one and tighten it.

   To form the stop point, both cable ties should be tightened sufficiently so they cannot slide down the fiber optic cable.

Copyright © 2025 Christie Digital Systems USA, Inc. All rights reserved.
If printed, please recycle this document after use.

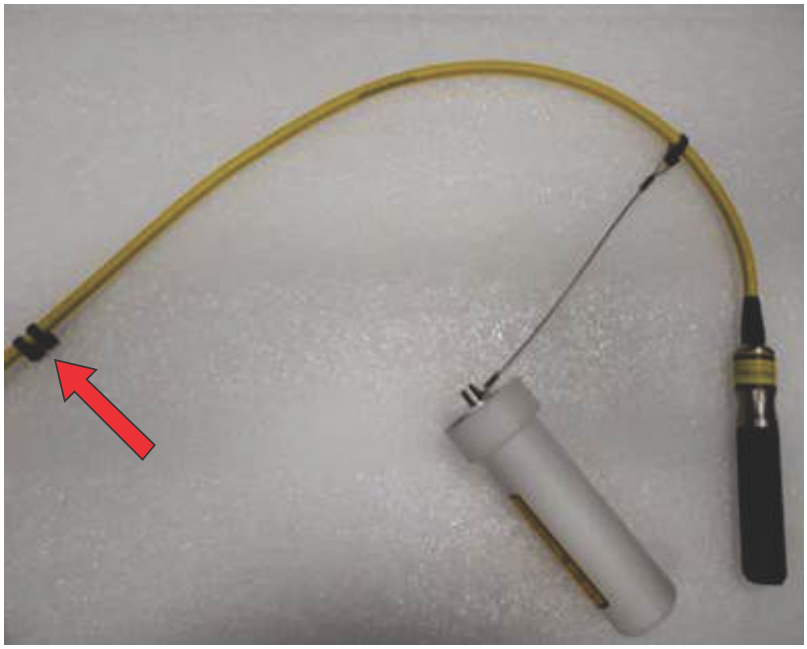

5. Make sure the tethered safety cover cannot slide past the stop point.
6. Trim all the cable ties.
7. Slide the tethered safety cover back to the connector end and place the cover over the fiber connector and its dust cap.

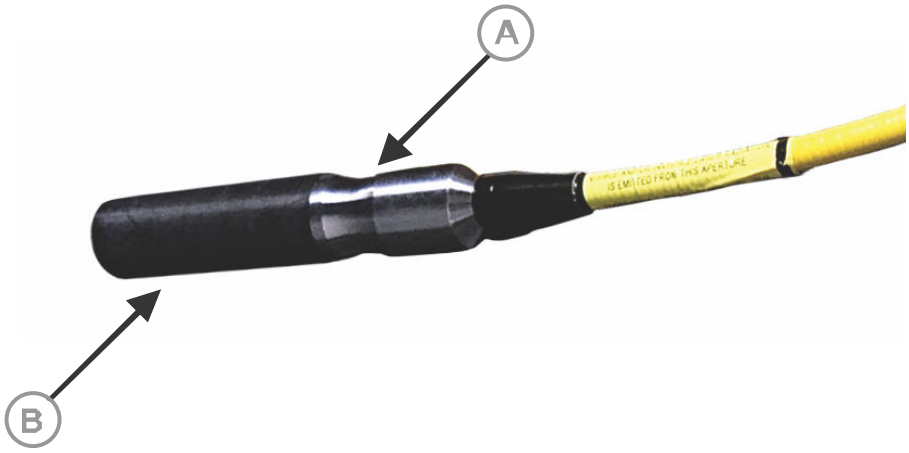

A	Fiber connector
B	Dust cap

8. Close the safety cover lid and tighten the screw.

Copyright © 2025 Christie Digital Systems USA, Inc. All rights reserved.
If printed, please recycle this document after use.

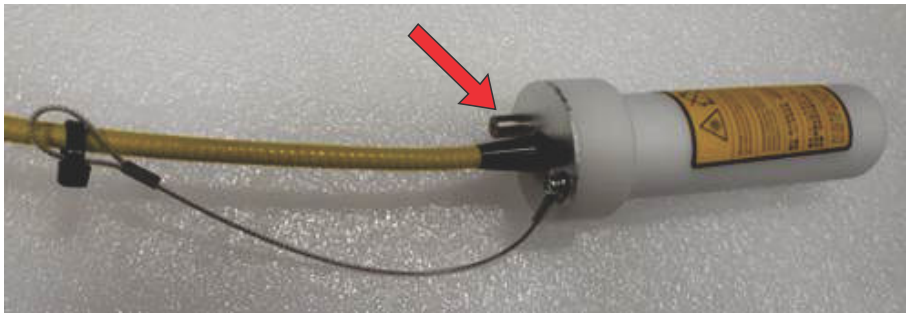

The tethered safety cover must remain installed on the fiber connector whenever the fiber optic cable is not connected to the projector.

When the fiber optic cable is connected to the projector, store the fiber connector dust cap inside the tethered safety cover.

Connecting the fiber optic cable to the projector

Attach the fiber optic cables from the laser illumination source to the projector using a curved strain relief.

For additional information on the laser illumination source and the fiber optic cable, refer to the laser illumination source's product documentation.

1. Locate the fiber strain relief (shipped in a separate box with the projector).
2. Remove the three screws along the top of the rear lower cover.

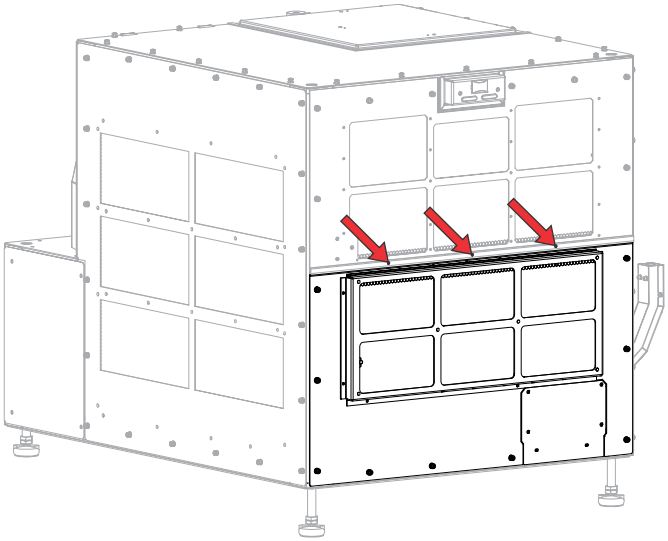

3. Loosen the nine screws and remove the rear lower cover.

Copyright © 2025 Christie Digital Systems USA, Inc. All rights reserved.
If printed, please recycle this document after use.

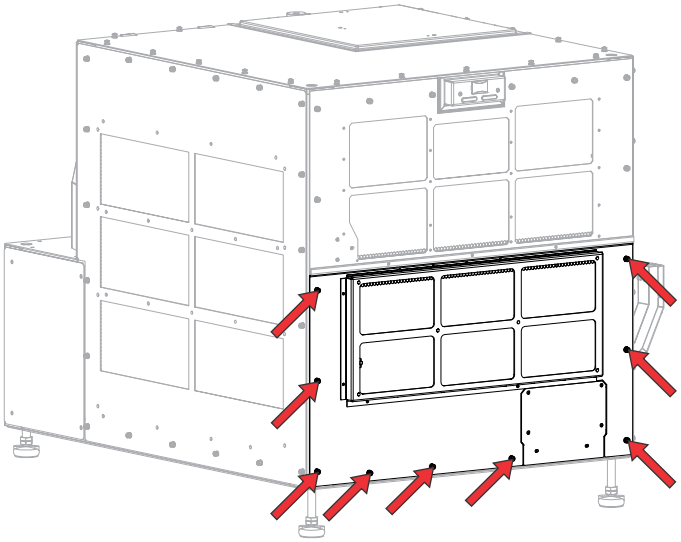

4. Tighten the four screws to secure the fiber strain relief to the projector .

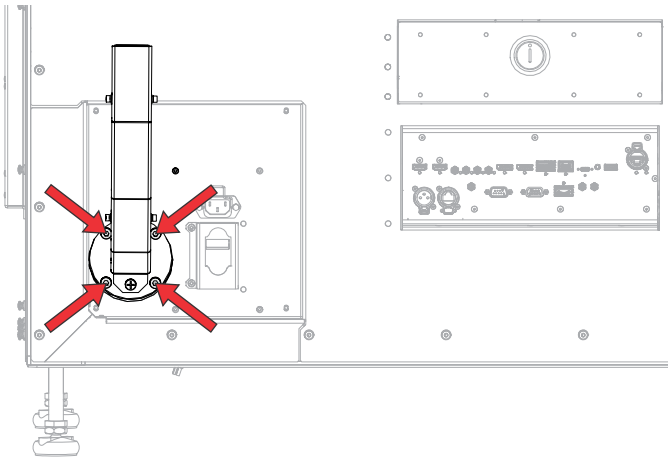

5. Remove the five screws securing the fiber strain relief cover.

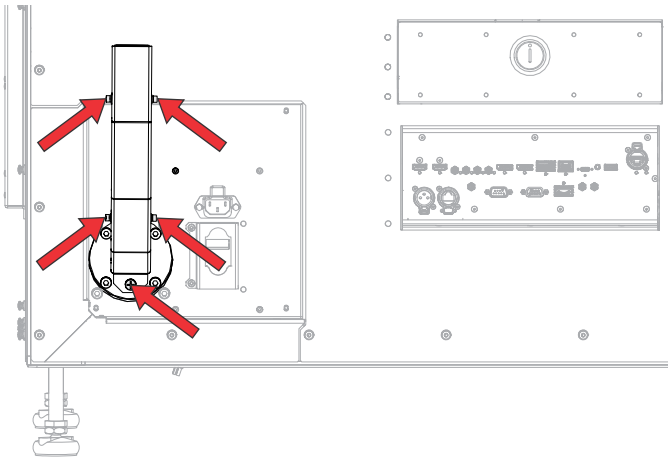

Copyright © 2025 Christie Digital Systems USA, Inc. All rights reserved.
If printed, please recycle this document after use.

6. Remove the dust cover from the fiber input location in the projector and make sure the knurled ring and locking pin are both rotated counterclockwise.
7. To remove the top clamp from the fiber strain relief, remove the four screws.

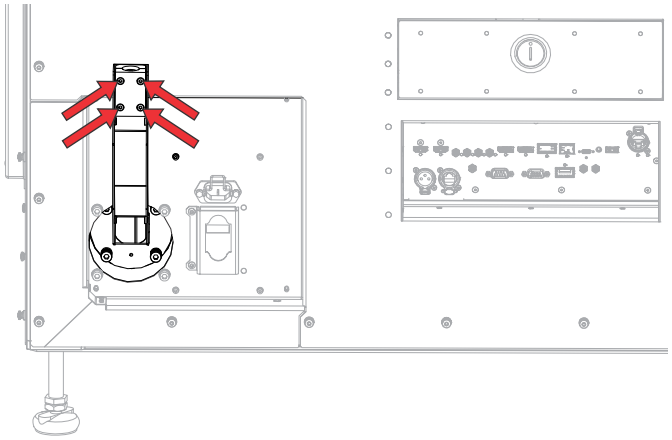

8. Feed the fiber optic cable with the fiber connector dust cap attached on the tip through the fiber strain relief.

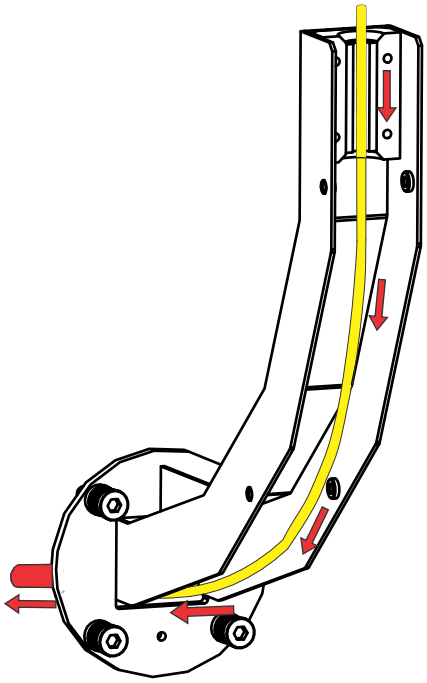

9. Remove the dust cap from the end of the fiber optic cable and store it in the safety cover.
10. To secure the fiber connector dust cap inside the safety cover, tighten the screw.
11. Gently slide the fiber optic cable into the fiber input.

Copyright © 2025 Christie Digital Systems USA, Inc. All rights reserved.
If printed, please recycle this document after use.

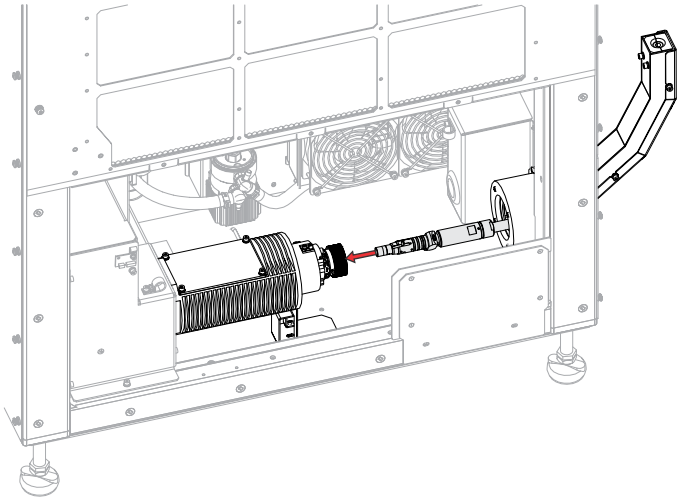

12. To lock the fiber in place, rotate the locking collar clockwise until you see the locking pin start to turn and no longer moves forward and then rotate the knurled ring clockwise.
13. Re-attach the cover to the fiber strain relief and tighten the five screws removed in step 6 to secure it.

Connecting the Ethernet cable to the projector

Connect the projector to the laser illumination source with an Ethernet cable.

1. Connect one end of an Ethernet cable to the Laser Rack network port on the Video Input panel of the projector.
2. Connect the other end of the Ethernet cable to the network port on the lower-left rear side of the laser illumination source.

   Two Ethernet port styles are available on the laser illumination source and the style shown below may not match the style on your laser illumination source.

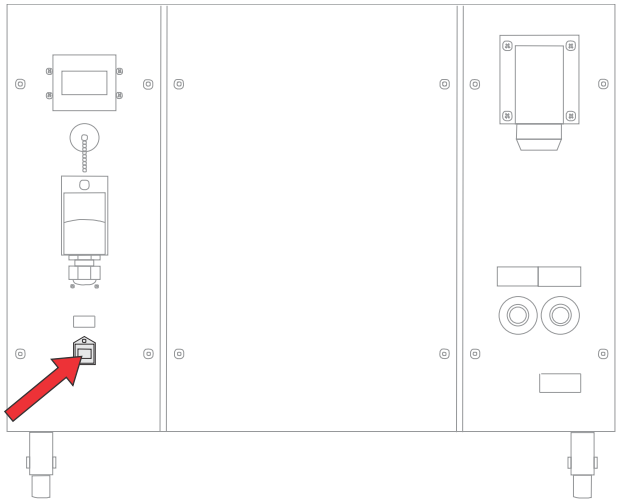

Copyright © 2025 Christie Digital Systems USA, Inc. All rights reserved.
If printed, please recycle this document after use.

Setting up the chiller unit

For detailed information on setting up the chiller, refer to the documentation provided by the manufacturer of the chiller unit.

1. Position the chiller on level ground.
2. Confirm the chiller can operate and maintain *proper specifications* (on page 17) as it is plumbed to the laser illumination source.
3. Connect the chiller hoses to the laser illumination source ensuring the output of the chiller is connected to the port on the laser rack marked **SUPPLY** and the port on the laser rack marked **RETURN** is connected to the return port on the chiller.

   If a Christie dripless quick disconnect (QD) solution was provided, confirm the male QD connectors are on the output of the chiller and the **RETURN** side of the laser rack, and the female QD connectors are on the port marked **SUPPLY** on the laser rack and on the return side of the chiller. Hoses supplied for use with the Christie-supplied QD system have a male QD on one end and a female QD on the other end regardless of the presence of any 90° elbows that may or may not be used in the system. This essentially eliminates the opportunity of connecting each system incorrectly.

   For more details, refer to the *Dripless Quick Disconnect and Chiller Hose Kit Instructions for the Mirage SST Light Source and Chiller (P/N: 020-103501-XX)*.

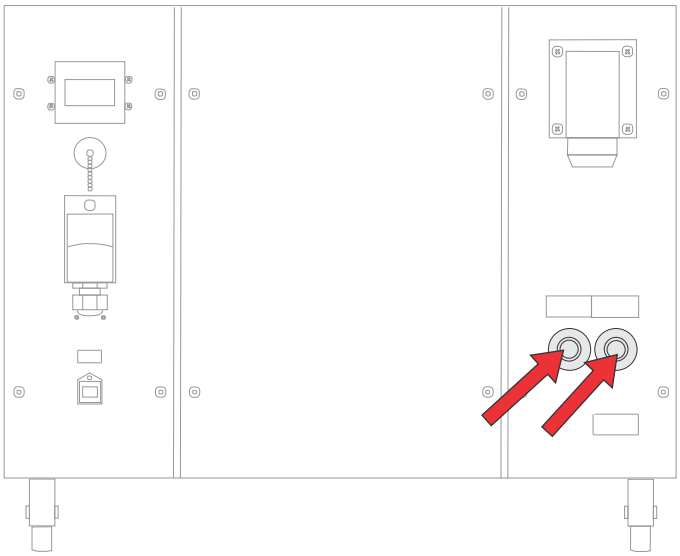

4. Make sure a qualified electrician connects the AC power to the chiller.

   For electrical rating information, refer to the license label on the chiller. Additional information is available in the chiller's product documentation.

Performing initial system start-up

Learn how to turn on all components of the Christie Eclipse system for the first time: chiller, laser illumination source, and projector head.

Warning! If not avoided, the following could result in death or serious injury.

- SHOCK HAZARD! Do not attempt operation if the AC supply is not within the specified voltage and current, as specified on the license label.

Copyright © 2025 Christie Digital Systems USA, Inc. All rights reserved.
If printed, please recycle this document after use.

Never run the laser illumination source without the cooling system already running. The chiller must be the first item turned on before power is applied to the laser rack and kept operating until after the AC lockout/switch is rotated to the off position.

1. Verify the coolant lines are connected correctly.
2. Fill the chiller reservoir with an approved coolant.
3. Turn on the chiller, set the temperature to between 19 to 22°C (66 to 71.6°F).

   For more information on how to turn on the chiller, refer to the chiller's product documentation.
4. Check that no leaks exist in the system.
5. Check the coolant level in the reservoir and hoses and top up the coolant as required.
6. Allow the chiller to run until the system is operating with no new bubbles entering the reservoir. Add additional coolant as necessary.

   This typically takes approximately 5 to 10 minutes.
7. Power on the laser illumination source:
   - Local operation— Rotate the main AC lockout/switch (A) to the ON position and rotate the Power key (B) clockwise to the ON position.
   - Remote operation—Rotate the main AC lockout/switch (A) to the ON position and rotate the Power key (B) counter clockwise to the REM (remote) position. From the automation device, turn on the laser illumination source (by closing circuits 8/9 from the J33 wire).

   The Interlock status indicator (C) on the laser illumination source turns yellow.

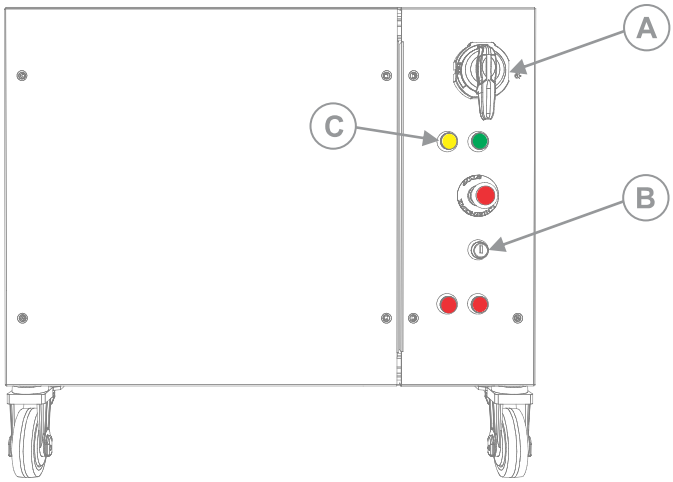

8. On the projector beside the AC inlet, move the AC breaker/switch to the ON position.

   The projector boots into standby mode after approximately 30 seconds. If the projector is properly connected, the light on the back of the projector should be yellow.
9. Once the projector is in standby, on the projector keypad or the projector remote, select and hold **Power** until a beep sounds.

   The projector can also be turned on using the web user interface. After a few seconds, the projector moves to the on state, causing the yellow light on the laser illumination source to turn off. The laser is ready to be turned on but no illumination occurs until the green button is pressed and the lasers have warmed up.
10. Turn on the lasers:

Copyright © 2025 Christie Digital Systems USA, Inc. All rights reserved.
If printed, please recycle this document after use.

- Local operation— On the laser illumination source, select the green **Start** button (D). This illuminates the green (button) light and the yellow light goes out.
- Remote operation—From the automation device, turn on the lasers with a 500ms contact closure of circuits 21/22 on the J33 wire. This illuminates the green (button) light and the yellow light goes out.

The two Emission status indicators (E) turn red. When the lasers are warmed up and the projector is ready, the shutter automatically opens and you can display an image (use test pattern if no source image is connected).

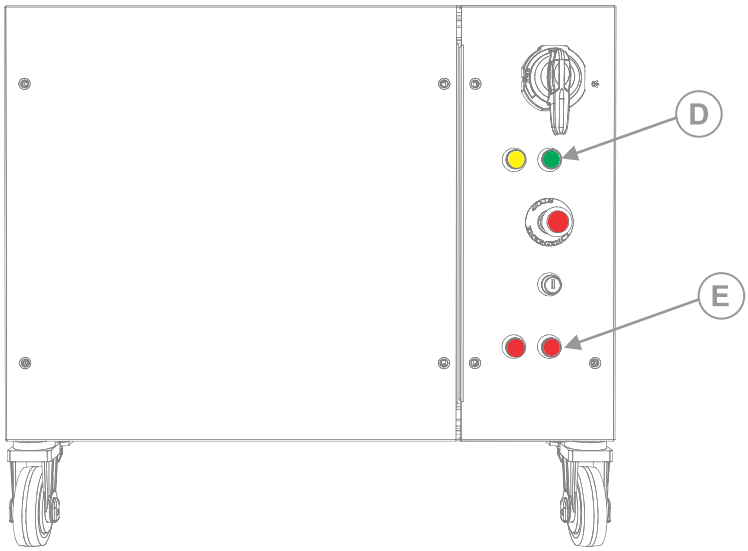

On the projector, the **Status** > **Laser Info** > **Laser Bank State** menu displays the message "Warming Up". When that message disappears, the lasers are ready. It typically takes the lasers approximately 10 to 15 minutes to warm up when turning on the first time from the off position. This could be longer if the start-up temperatures are approaching minimum or maximum temperatures for operation. The projector will operate with the shutter closed until the lasers are warmed up.

Turning on the system

After the system has been initiated for the first time, not all steps need to be performed when subsequently turning on the system.

Warning! If not avoided, the following could result in death or serious injury.

- SHOCK HAZARD! Do not attempt operation if the AC supply is not within the specified voltage and current, as specified on the license label.

Never run the laser illumination source without the cooling system already running. The chiller must be the first item turned on before power is applied to the laser rack and kept operating until after the AC lockout/switch is rotated to the off position.

1. Check the coolant level and if the coolant level is low, check for leaks.

   It is expected to see periodic evaporation of the fluid in the system. Do one of the following:

   - If no leak exists, **only** add distilled water (not drinking water).
   - If a leak exists, after the leak is repaired, add premixed coolant at the recommended 2:1 ratio.

Copyright © 2025 Christie Digital Systems USA, Inc. All rights reserved.
If printed, please recycle this document after use.

Never add premix coolant to a system that does not have a leak as only the water in the system evaporates over time. If coolant is added instead of distilled water, the correct concentration of the ratio of coolant to water (80/20) becomes too concentrated and overheating problems occur.

2. Turn on the chiller.

   For more information on how to turn on the chiller, refer to the chiller's product documentation.

3. Turn on the laser illumination source: On the laser illumination source, rotate the main AC lockout/switch (A) to the on position and rotate the Power key (B) clockwise to the on position.

   - Local operation— Rotate the main AC lockout/switch (A) to the ON position and rotate the Power key (B) clockwise to the ON position.
   - Remote operation—Rotate the main AC lockout/switch (A) to the ON position and rotate the Power key (B) counter clockwise to the REM (remote) position. From the automation device, turn on the laser illumination source (by closing circuits 8/9 from the J33 wire).

   The Interlock status indicator (C) on the laser illumination source turns yellow.

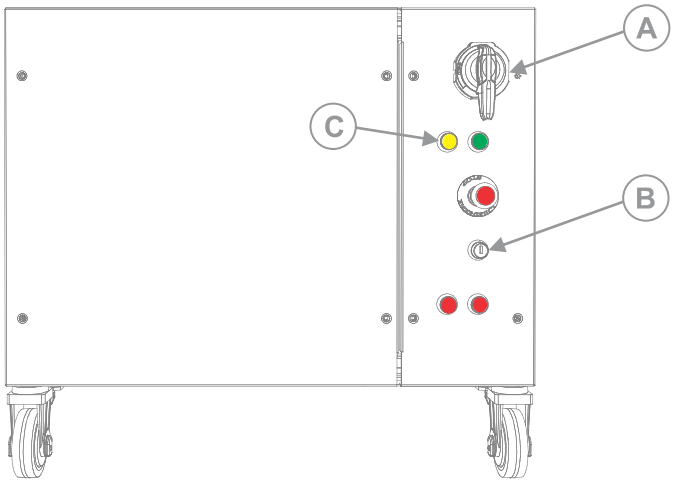

4. If the breaker is off, on the projector beside the AC inlet, move the AC breaker/switch to the on position.

   The projector boots into standby mode after approximately 30 seconds.

Copyright © 2025 Christie Digital Systems USA, Inc. All rights reserved.
If printed, please recycle this document after use.

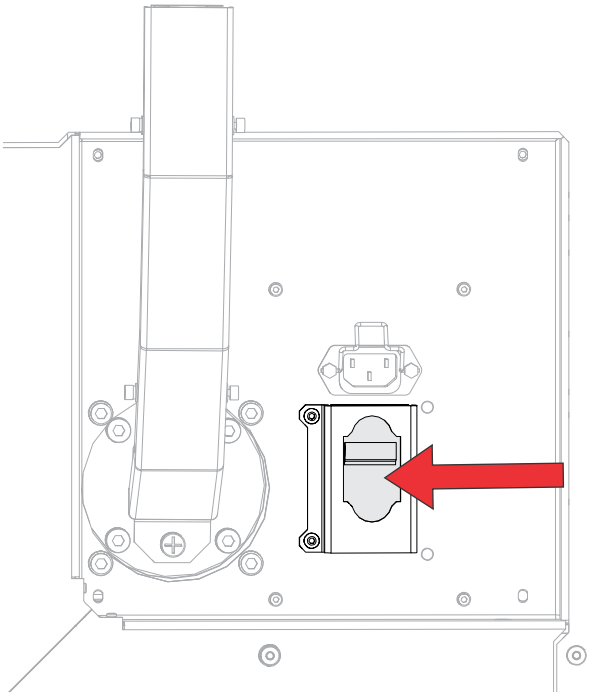

5. Once the projector is in standby, on the projector keypad or the projector remote, select and hold the **Power** button until a beep sounds.

   The projector can also be turned on using the web user interface. After a few seconds, the projector moves to the on state, causing the yellow light on the laser illumination source to turn off. The laser is ready to be turned on but no illumination occurs until the green button is selected and the lasers have warmed up.

6. Turn on the lasers:

   - Local operation— On the laser illumination source, select the green **Start** button (D). This illuminates the green (button) light and the yellow light goes out.
   - Remote operation—From the automation device, turn on the lasers with a 500ms contact closure of circuits 21/22 on the J33 wire. This illuminates the green (button) light and the yellow light goes out.

   The two Emission status indicators (E) turn red. When the lasers are warmed up and the projector is ready, the shutter automatically opens and you can display an image (use test pattern if no source image is connected).

Copyright © 2025 Christie Digital Systems USA, Inc. All rights reserved.
If printed, please recycle this document after use.

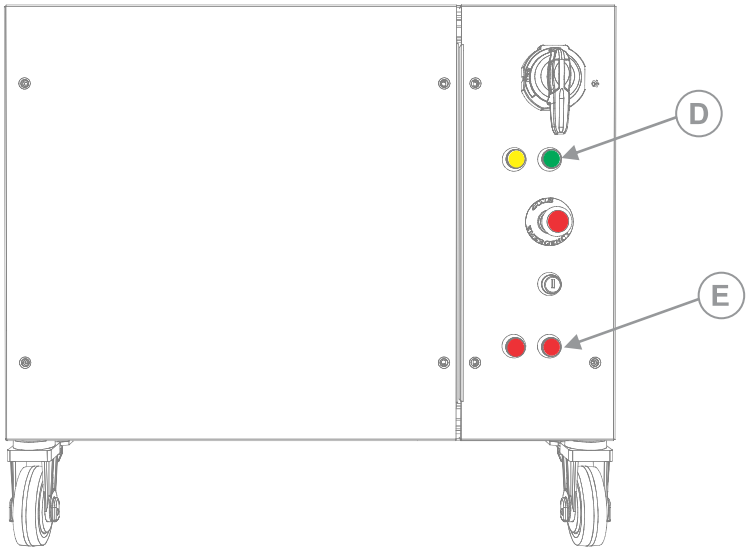

On the projector, the **Status** > **Laser Info** > **Laser Bank State** menu displays the message *Warming Up*. When that message disappears, the lasers are ready. It typically takes the lasers approximately 10 to 15 minutes to warm up when turning on the first time from the off position. This could be longer if the start-up temperatures are approaching minimum or maximum temperatures for operation. The projector will operate with the shutter closed until the lasers are warmed up.

Turning off the system

Learn how to turn off all components of the Christie Eclipse system: projector head, laser, and chiller.

When powering off in preparation for inspection or maintenance, always disconnect from AC.

1. To turn off the light source using the projector keypad or remote, select and hold the **Power** button until a beep sounds.

   The projector can also be turned off with the web user interface. Always allow the projector to complete the 10 minute cool down cycle before power is turned off at the breaker or unplugged or projector damage could occur.

2. Turn off the laser illumination source:

   - Local operation— On the laser illumination source, rotate the Power key (B) counter clockwise to the OFF position and, if required, after 10 seconds rotate the main AC lockout/switch (A) to the OFF position.
   - Remote operation—From the automation device, turn off the laser illumination device. By opening the circuits 8/9 on the J33 connector wire, it is not necessary on the laser rack to turn the main AC lockout/switch (A) to the OFF position.

   The main AC lockout/switch (A) does not need to be turned off. If the lockout is in the ON position, you may hear a dehumidifier operating. This is normal. Christie recommends, if possible, to keep the chiller operating for 10 minutes after the laser AC lockout/switch (A) has been rotated to the OFF position.

Copyright © 2025 Christie Digital Systems USA, Inc. All rights reserved.
If printed, please recycle this document after use.

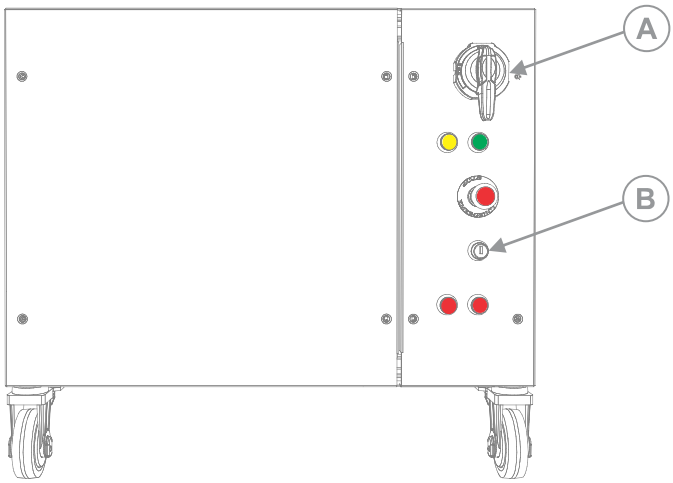

For more information on the chiller operation, refer to the chiller's product documentation.

Projector LED status indicators

Identify the LED state colors and meaning.

LED	State		Description
Blue	Solid	Standby	Light source is off. Video electronics are off. Projector status is OK.
	Flashing	Cool down	Projector is moving to one of the two standby states: • Light source is off and video electronics are booting up. • Light source is off. Video electronics and light source is cooling down.
Green	Solid	Light source on	Light source is on. Projector status is OK.
	Flashing	Startup	Projector is moving to light source on state. Light source is warming up. Video electronics are initializing.
Yellow	Solid	Warning in standby	Projector is in standby state. A problem exists with the projector that does not prevent it from operating.
	Flashing yellow/green	Warning during startup	Projector is in a startup state. A problem exists with the projector that does not prevent it from operating.
	Flashing	Warning with light source on	Light source is on. A problem exists with the projector that will not cause it to shut down.
	Flashing yellow/blue	Warning during cool down	Projector is in a cool down state. Light source is off. Video electronics and light source are cooling down. A problem exists with the projector that does not prevent it from operating.

Copyright © 2025 Christie Digital Systems USA, Inc. All rights reserved.
If printed, please recycle this document after use.

LED	State		Description
Red	Solid	Error in standby	Projector is in standby. An error exists that prevents the projector from starting up.
	Flashing	Error	An error with the projector exists during startup, cool down, or when the light source is off. Projector will proceed to shut down.
Off		AC off	The AC power is off.

Projector LED shutter indicators

Identify the shutter LED state colors and meaning.

LED	State	Description
Solid magenta	Shutter closed	The shutter is closed. In standby, the shutter is always automatically closed and the magenta light is muted.
Off	Shutter open	The shutter is open.

Adjusting the image

Make sure the content displayed by the Christie Eclipse has a high quality appearance by manipulating the image settings.

Aligning the image

Follow these steps to align the image.

1. Set RGB to 100% and main slider to 20%.
   a) From the side panel display, select **MENU** > **Configuration** > **Light & Output Settings**.
   b) Set Red, Green, and Blue sliders to 100%.
   c) Set the main slider to 20%.
2. Turn on the lasers.
3. Open the Hawkeye software and connect to the projector IP address.
4. Open the Alignment tab and select the **IOS alignment** pattern.
5. On the 2K (premod) light engine, complete the following:
   a) Loosen four screws and straighten the adjust integrator.
   b) Adjust the 2K light engine fold mirror using the two visible set screws.
      Do not adjust the third set screw.

Copyright © 2025 Christie Digital Systems USA, Inc. All rights reserved.
If printed, please recycle this document after use.

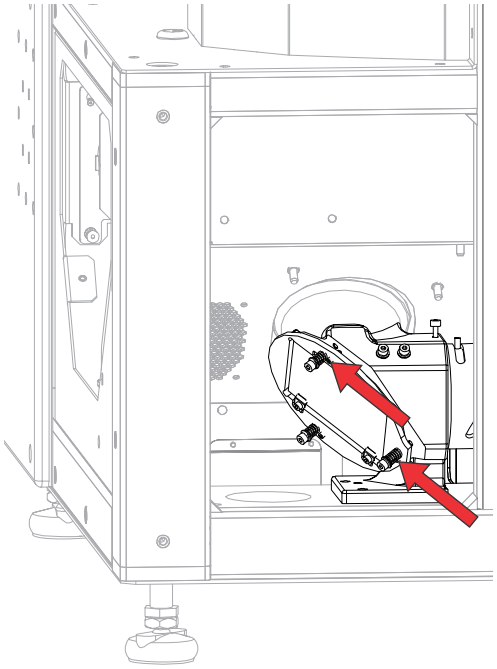

c) Fill the entire screen with light.

d) Loosen the set screws for the 2K (premod) light engine IOS zoom and focus the image.

e) Make any necessary adjustments.

6. On the 4K light engine, complete the following:

   a) Load the **Convergence** pattern in the Hawkeye software.

   b) Adjust *horizontal* (on page 55) and *vertical* (on page 56) boresight.

   c) *Adjust the convergence* (on page 57) of the 4K light engine.

7. On the PSF, complete the following:

   a) Load the **PSF alignment** pattern in Hawkeye.

   b) Loosen the compensator plate adjustment screw and move the compensator plate all the way to the left.

Copyright © 2025 Christie Digital Systems USA, Inc. All rights reserved.
If printed, please recycle this document after use.

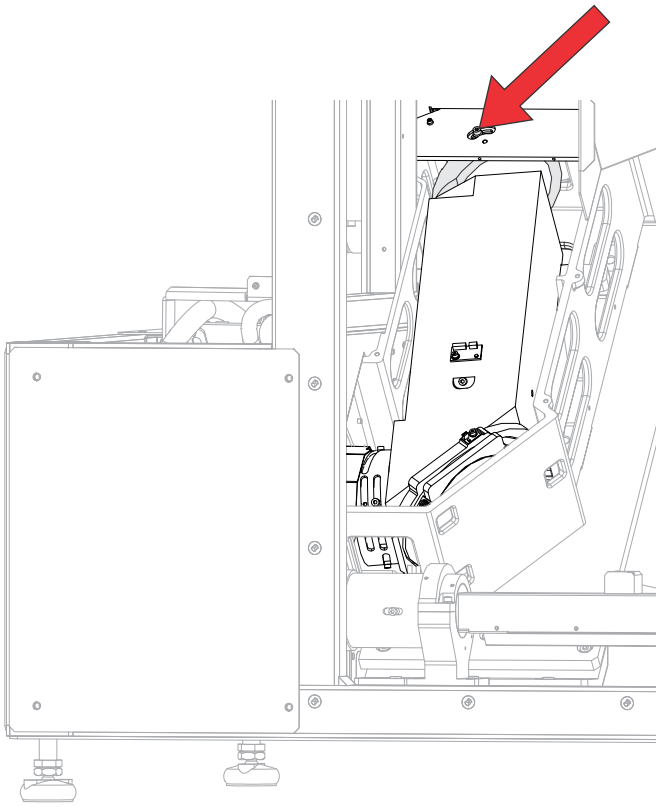

c) Adjust the two uppermost set screws on the PSF fold mirror until the green crosshairs of the premod engine overlap the red crosshairs of the prime engine.

   Do not adjust the third set screw.

d) Loosen the PSF focus ring set screw and adjust the focus until the green dots are sharp.

e) Adjust the condenser ring and focus to achieve the clearest pixels.

f) Repeat steps c to e until the crosshairs are aligned and the green dots look sharp with low flare across the image.

g) Observe the White test pattern for presence of the crosshatch artifact on screen.

h) If visible, slightly defocus the PSF and recheck.

8. In the Hawkeye software, complete the following:

   a) Connect the designated Hawkeye calibration camera with the Hawkeye software.

   b) Place the camera as centered and close to the image as possible while having full screen visible and not obstructing light path.

   c) Make sure auto focus is set on the camera.

   d) Run Hawkeye calibration.

      Make sure the process is done in low light and is not be interrupted. The process lasts 15 to 25 minutes.

Copyright © 2025 Christie Digital Systems USA, Inc. All rights reserved.
If printed, please recycle this document after use.

Rotating the integrator rod

The integrator rod is aligned by Christie. If screen shadows exist, perform this procedure.

1. Loosen the 20 screws securing the optical access cover and remove it.
2. Loosen the two screws (3 mm hex) securing the retaining clip to the rear of the integrator.

   Use caution when loosening these screws to avoid damaging the remote temperature sensor module (RTSM).
3. Rotate the integrator rod to remove the shadow from the corners.
4. To focus the integrator rod, slide it forward.
5. To secure the integrator rod, tighten the two retaining clip screws.
6. Replace the optical access cover.

Adjusting horizontal boresight

Boresight adjustment balances the tilt of the lens mount to compensate for screen-to-projector tilt.

Warning! If not avoided, the following could result in death or serious injury.

- UV EXPOSURE! Protective UV safety glasses with side shields and protective safety clothing approved by Christie must be worn when performing optical adjustments or servicing the product.
- EXTREME BRIGHTNESS! Do not place reflective objects in the product light path.

Caution! If not avoided, the following could result in minor or moderate injury.

- Do not look directly into the lens when the light source is on. The extreme high brightness can cause permanent eye damage.
- Adjust boresight with low light levels from a single laser module.

1. From the Test Pattern menu, select the **Boresight** test pattern.
2. Loosen the lens mount stabilization screw (D).

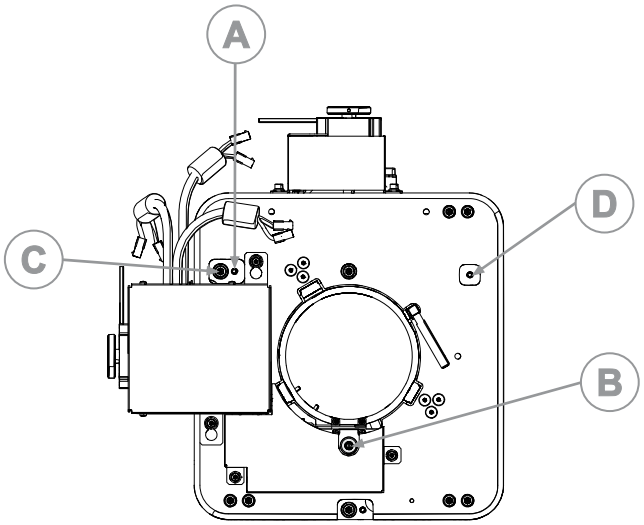

3. Loosen the horizontal lock screw (A).
4. Extend the lens focus (B) completely.

Copyright © 2025 Christie Digital Systems USA, Inc. All rights reserved.
If printed, please recycle this document after use.

5. Adjust the focus using the Focus knob to retract the lens.

   Watch the image at the left edge of the screen until it comes into focus. If the entire screen is in focus, proceed to step 7.
6. Continue retracting the lens.
   a) If the right side of the image comes into focus before the lens is completely retracted, adjust the horizontal boresight bolt (C) to balance the left and right edges.
   b) If the right side of the image fails to focus, adjust the horizontal boresight bolt (C)
7. When both sides appear equally blurry, adjust the offsets to re-center the image.
8. Repeat steps 1 to 6 until both sides of the image are focused.
9. Tighten the lock screw (A) and the lens mount stabilization screw (D) to maintain the adjustments.
10. Check the boresight again.
11. Adjust vertical boresight, if required.
12. To calibrate the lens motors, select **Menu** > **Configuration** > **Calibrate Lens Motors**.

Adjusting vertical boresight

Boresight adjustment balances the tilt of the lens mount to compensate for screen-to-projector tilt.

Warning! If not avoided, the following could result in death or serious injury.

- UV EXPOSURE! Protective UV safety glasses with side shields and protective safety clothing approved by Christie must be worn when performing optical adjustments or servicing the product.
- EXTREME BRIGHTNESS! Do not place reflective objects in the product light path.

Caution! If not avoided, the following could result in minor or moderate injury.

- Do not look directly into the lens when the light source is on. The extreme high brightness can cause permanent eye damage.
- Adjust boresight with low light levels from a single laser module.

1. From the Test Pattern menu, select the **Boresight** test pattern.
2. Focus the image at the top edge of the screen.
3. Loosen the vertical lock screw (A).

Copyright © 2025 Christie Digital Systems USA, Inc. All rights reserved.
If printed, please recycle this document after use.

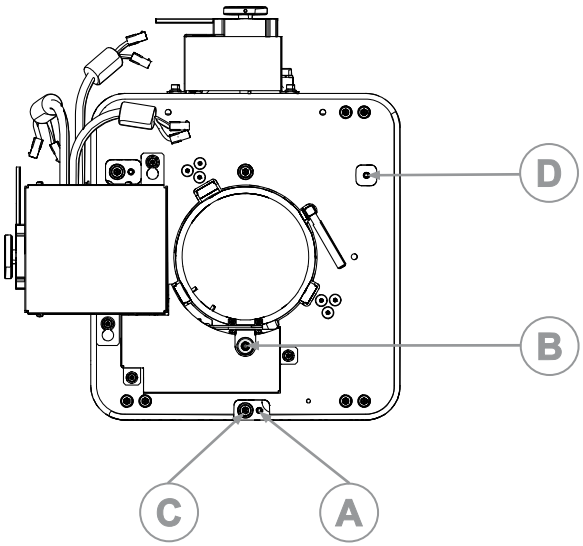

4. Extend the lens focus (B) completely.
5. Adjust the Focus knob to retract the lens.

   Watch the image at the top edge of the screen until it comes into focus. If the entire screen is in focus, proceed to step 8.
6. Continue retracting the lens.
   a) If the bottom edge of the image comes into focus before the lens is completely retracted, adjust the vertical boresight bolt (C) to direct or aim the lens mount up towards the top of the screen to balance out the top/bottom edges.
   b) If the top edge of the image is not in focus, adjust the vertical boresight bolt (C) to direct or aim the lens mount toward the bottom of the screen
7. When both sides appear equally blurry, adjust the horizontal and/or vertical offset to re-center the image on the screen.
8. Repeat Steps 2 to 7 until the top and bottom of the screen are both well-focused.
9. Re-focus the center of the image. The goal is for good focus at the center and on all sides.
10. Tighten the lock screw (A) and the lens mount stabilization screw (D) to maintain the adjustments.
11. Check the boresight again.
12. Perform a lens calibration, select **Menu** > **Configuration** > **Calibrate Lens Motors**.

Adjusting convergence

A convergence problem occurs when one or more projected colors (red, green, blue) appears misaligned when examined with a test pattern.

The three colors should overlap to form pure white lines throughout the image and one or more poorly converged individual colors may appear adjacent to some or all of the lines. When adjusting the convergence, you are adjusting red and green to blue.

Convergence is only adjusted on the primary 4K light engine.

1. Reduce the laser module power to 25%:

Copyright © 2025 Christie Digital Systems USA, Inc. All rights reserved.
If printed, please recycle this document after use.

RGB sliders can be set to 100%. Change the main slider to the required overall brightness percentage as specified below.

a) Open the IPG RGB GUI application.

b) Reduce the RGB laser power to 25%.

2. From the Test Pattern menu, select the **Convergence** test pattern.

   The following test pattern does not show correctly if Hawkeye software calibration is not complete and the Convergence pattern should be selected within Hawkeye software. Otherwise, turn on the 2K light engine completely after selecting the test pattern by navigating to **MENU** > **Admin** > **Diagnostics** and turn the 2K light engine test pattern to **White** for red green and blue.

   Convergence test pattern

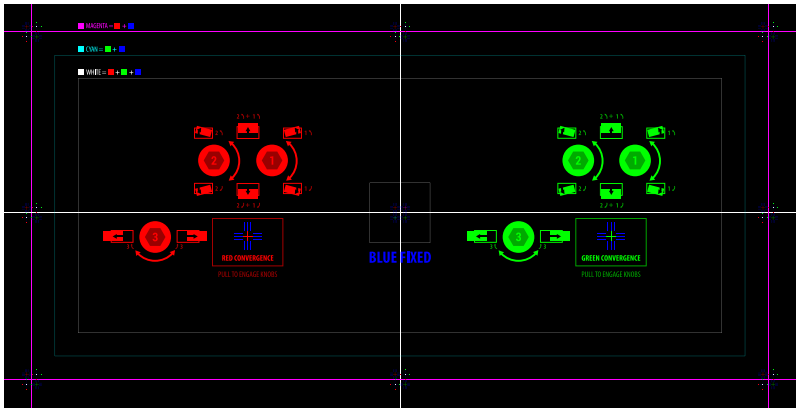

   Hawkeye Convergence test pattern

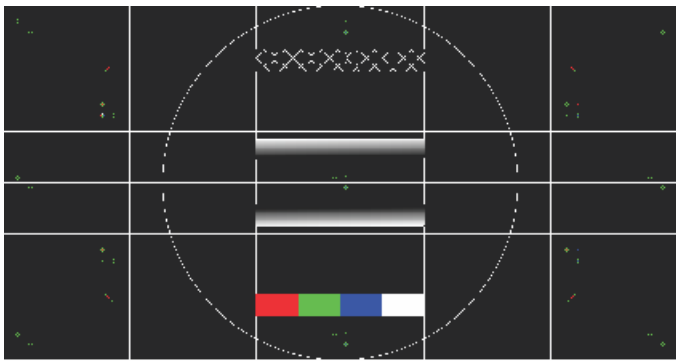

3. Set the lens to its lowest zoom setting.
4. *Perform a convergence to red* (on page 59).
5. Adjust the zoom and focus until the entire outer edge of the test pattern frame is in focus.
6. Turn the horizontal and vertical adjustment screws on the 4K light engine until the lines in the test pattern form a single, solid white line.
7. If the convergence was altered, the Hawkeye calibration must be redone.

Copyright © 2025 Christie Digital Systems USA, Inc. All rights reserved.
If printed, please recycle this document after use.

Adjusting images with full light

The image adjustments described in this section are done with the lasers at normal operating levels.

Calibrating the lens motor

Make sure the lens motor is calibrated before using the projector.

If the lens motors are not calibrated properly, implications may include:

- Incorrect reporting of the lens motor position.
- Inability to use the full range of the lens motors.
- Lens motors traveling outside of the pre-defined keep-out area.
- Damage to the projector.

Calibrate the lens motors when any of the following conditions are met:

- After a lens change.
- After the projector is moved and/or jostled.
- After any manual adjustment is made to the zoom or focus.

To calibrate the lens:

1. Select **MENU** > **Configuration** > **Lens Settings** > **Lens Calibration**.
2. Select **Enter**.

Converging the image

Converging the image aligns the red, green, and blue image components.

Warning! If not avoided, the following could result in death or serious injury.

- UV EXPOSURE! Protective UV safety glasses with side shields and protective safety clothing approved by Christie must be worn when performing optical adjustments or servicing the product.

Caution! If not avoided, the following could result in minor or moderate injury.

- Observe all electrostatic precautions. Use a grounded wrist strap and insulated tools when handling, servicing, or cleaning electronic assemblies.
- Keep fingers and other body parts away from the moving parts in the product. Tie back long hair, and remove jewelry and loose clothing before manually adjusting the product.

1. Make sure image-zoom and centering is complete.
2. Make sure horizontal and vertical boresight procedures have been completed.
3. Once at the required power settings, allow 15 minutes for the unit to reach normal operating temperature.
4. Converge the image.
   a) *Evaluate the image convergence* (on page 60).
   b) *Adjust the image convergence* (on page 61).

Copyright © 2025 Christie Digital Systems USA, Inc. All rights reserved.
If printed, please recycle this document after use.

Digital micromirror device (DMD) convergence

The projector uses three digital micromirror device (DMD) panels to produce separate red, green, and blue image components. To ensure the most accurate color representation across the image, the three panels must be perfectly aligned.

DMD convergence must be performed by a Christie qualified technician. This information is a supplementary guideline on convergence and does not replace personal tool preferences, mechanical experiences, and individual techniques.

Convergence is only adjusted on the primary 4K light engine.

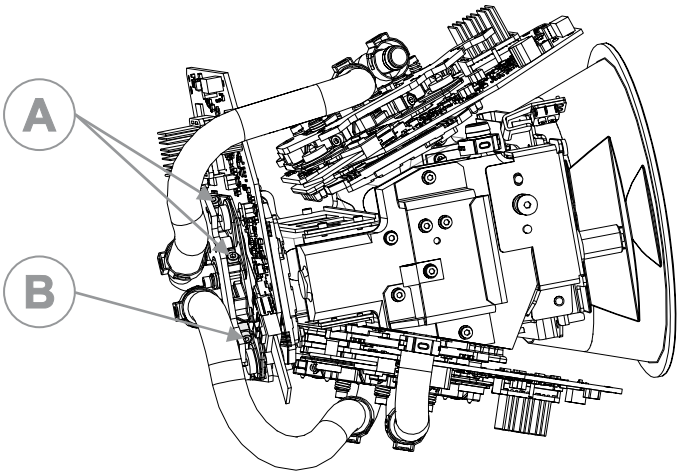

A Vertical and twist screws 1 and 2

B Horizontal screw 3

Evaluating the image convergence

Evaluate the image convergence to discover if any adjustments are required.

1. Display the **Hawkeye Convergence** test pattern.
2. Zoom and focus the image to see the entire outer edge of the test pattern frame.

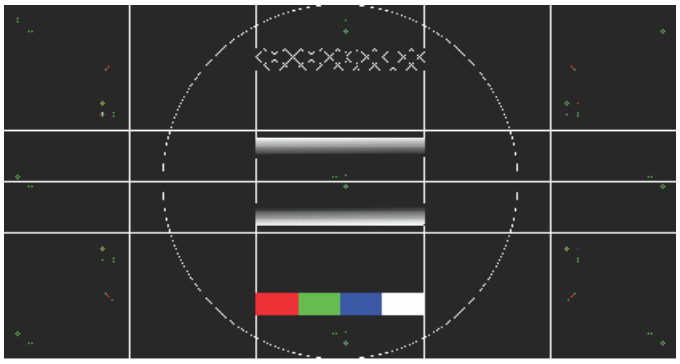

3. Using the horizontal and vertical white lines, judge the convergence issues.

   Look at one color at a time and remember you can see a possible seven colors to lead you to a valid conclusion. To help, use the stripe pattern boxes along the outer frames.

Copyright © 2025 Christie Digital Systems USA, Inc. All rights reserved.
If printed, please recycle this document after use.

Magenta=Blue+Red / Yellow=Green+Red / Cyan=Green+Blue / White=Red+Green+Blue

4. Look for twist using the center vertical and horizontal lines—scan from one side of the screen to the other, observing any change in vertical position of the color in question relative to the point where you started.

Adjusting the image convergence

Alter the red, green, and blue formatters to overlap the lines to form pure white lines throughout the image.

- To shift the panels up and down, adjust the vertical screw.
- To shift the panels left and right, adjust the horizontal screw.
- To change the angle of the panel, adjust the twist screw.

The red and green formatters are identical in physical layout and adjuster function. The blue formatter cannot be adjusted.

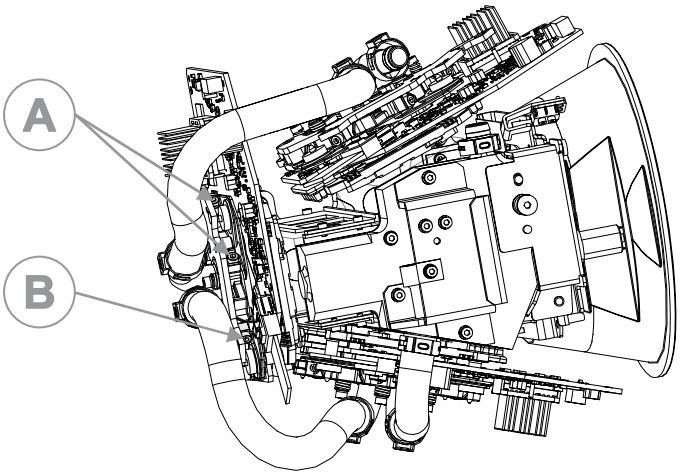

A Vertical and twist screws 1 and 2

B Horizontal screw 3

1. Monitor the prism temperature during the adjustment and keep it within a few degrees of the nominal temperature achieved above by lowering the light source power or periodically replacing the cover for a cool-down.

   Cooling is affected by removing the filter and fan pack assembly. If the procedure takes longer than an hour, watch for over-temperature alerts. Cool-down periods with the shutter closed and cover on may be required.

2. Using the 2.5 mm drivers, adjust the twist and vertical screws (A in the image above) for the red and green formatters.

   The vertical adjustment and twist adjustment screws interact with each other.

Copyright © 2025 Christie Digital Systems USA, Inc. All rights reserved.
If printed, please recycle this document after use.

- Turning one screw in the opposite direction of the other, affects the twist adjustment.
- Turning both screws equal amounts in the same direction, moves the images vertically.

Adjusting one screw at a time may cause binding and make it more difficult to achieve the required adjustment. Do not force the adjustment, the board should move easily with gentle pressure. Excessive force might cause the convergence adjustment to become misaligned once you remove the adjustment tool.

Screen/screw	A-1	A-2	B
↺	↺	↻	–
↻	↻	↺	–
⇧	↻	↻	–
⇩	↺	↺	–
⇦	–	–	↺
⇨	–	–	↻

3. Using the 2.5 mm driver, adjust the horizontal screw (B in the image above) for the red and green formatters.
4. Review the alignment changes to make sure the *convergence is satisfactory* (on page 62) and repeat steps 2 to 4 as necessary.

Image convergence assessment criteria

Use the following criteria to determine when the alignment changes are satisfactory.

The best possible convergence is:

- The center area should be perfectly aligned showing solid white pixels.
- Green and blue images should always be perfectly aligned to each other (to within 1/4 pixel total in all directions).
- The red image should be evenly 1/4 to 1/2 a pixel out around the outer area, showing cyan (green + blue) towards the center of the screen.

  The red image is slightly larger than the blue and green. The larger size is caused by the natural properties of red light due to a slow wavelength compared to blue light and green light. The angle that light travels is affected by every medium it travels through; in this case several pieces of glass are between red and the screen.

Copyright © 2025 Christie Digital Systems USA, Inc. All rights reserved.
If printed, please recycle this document after use.

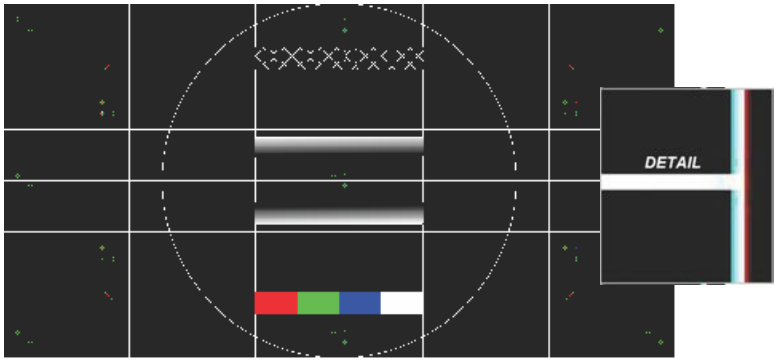

Red image non-uniformity

In certain circumstances, the projection lens may have tolerance deficiencies that cause the normal red image over-sizing to become slightly non-uniform. This non-uniformity generally appears on the lower-right of the image causing a perceived clockwise twist in the lower-right corner only. The other three corners appear normal.

- To minimize the effect on the bottom of the screen, twist the image slightly counter-clockwise. Keep the subtitle zone as converged as possible.
- If the problem appears to be more than an extra 1/2 of a pixel out of uniformity, you may need a new lens/prism assembly.

Obtaining white point and brightness

Follow these steps to obtain the white point and brightness.

1. From the side panel display, select **MENU** > **Configuration** > **Light & Output Settings**.
2. Set RGB to 100% and measure to find current white point.
3. Using a spectroradiometer (CR250, CR300, or PR740), measure the brightness and color of the screen.
4. Reduce the individual RGB laser power sliders until the white point is achieved.

   When completed correctly, one of the colors should remain at 100%.
5. Wait approximately 30 seconds for the green lasers to respond.

   Every time you adjust the green lasers, wait for the lasers to move to the new value.
6. Once the white point is achieved with the RGB sliders, the main slider can be reduced to 60%.

   For more precise adjustments, select the cap on the slider and select the up and down arrow keys. The white point may be required after main slider is adjusted
7. Repeat steps 3 to 6 to adjust white and reduce the main slider until the white point and brightness is achieved.
8. Save the laser settings.

Copyright © 2025 Christie Digital Systems USA, Inc. All rights reserved.
If printed, please recycle this document after use.

Disposing of the product packaging

Once the product has been installed and set up, Christie recommends reusing or recycling the product packaging according to your local regulations.

Completing the installation checklist

Complete the provided installation checklist (P/N: 020-103137-XX) and return it to Christie.

Copyright © 2025 Christie Digital Systems USA, Inc. All rights reserved.
If printed, please recycle this document after use.

Connecting devices and establishing communication

Learn how to connect external devices to the projector.

Video Input panel

The Video Input panel has a variety of ports that can be used for control, 3D sync, upgrading, retrieving interrogators, and connecting audio.

Video Input panel components

The following table lists the video components available depending if the card cage has VOM-IF, VOM-HBI, and CAVE LP connections. Christie Eclipse supports either the VOM-IF or VOM-HBI.

ID	Port	Description	Applies to	Default enabled	SDVoE enabled
A	12G SDI	Accept digital video data from 12G SDI sources.	CAVE LP		
B	HDMI	Accept digital video data from HDMI 2.0 input with HDCP 2.2 and 1.4 support.	All	X	X
C	SDI	Accepts digital video data from 12G, 6G, 3G, and HD SDI sources.	VOM-IF VOM-HBI	X	
D	DisplayPort	Accepts digital video data from DisplayPort 1.2 input with HDCP 1.3 support.	All	X	
E	Christie Link	Accepts digital video data from QSFP+ 40 GB optical Christie Link input.	All	X	X
F	SDVoE	Accepts digital video data from SDVoE input. Not all projectors support for the SDVoE feature. To determine if your projector supports the SDVoE function, see *Determining if SDVoE is supported* (on page 73) or contact Christie Technical Support.	VOM-IF VOM-HBI		X
G	Hibernate	Reserved for future use.	CAVE LP		

Copyright © 2025 Christie Digital Systems USA, Inc. All rights reserved.
If printed, please recycle this document after use.

ID	Port	Description	Applies to	Default enabled	SDVoE enabled
H	ENG SW	Reserved for Christie use.	CAVE LP		
I	USB -C	Connects a USB-C flash drive that has been formatted with a FAT32 file system. Can be used for upgrades, backups, restores, and interrogators.	All		
J	GigE PRY	Provides network control of the projector including connectivity to Art-Net 4 Ethernet communication protocol for the transfer of DMX512 data and commands.	CAVE LP		
K	USB 3.0-A	Connects a USB flash drive that has been formatted with a FAT32 file system. Can be used for upgrades, backups, restores, and interrogators.	All		
L	Ethernet	Provides Ehernet and network connection for remote control. 10/100/1000 Base-T Ethernet x 1 ruggedized connector.	VOM-IF VOM-HBI		
M	3D Sync In/3D Sync Out	Supported for 3D-enabled projectors (mini BNC for VOM-IF and standard BNC on VOM-HBI).	All		
N	Christie Link	Supports QSFP+ 40 GB optical Christie Link through connection for looping HDMI, DisplayPort, SDI, and/or Christie Link inputs to multiple projectors.	All		
O	DP 1.4	Accepts digital video data from DisplayPort 1.4 supporting EDID 1.3 with HDCP 1.3 support (for VOM-HBI only).	VOM-HBI CAVE LP	X	
P	HDMI 2.1	Accept digital video data from HDMI 2.1 supporting EDID 1.3 with HDCP 2.2 and 1.4 support (for VOM-HBI only).	VOM-HBI CAVE LP		
Q	AES3 Out	Reserved for future use.	VOM-HBI CAVE LP		
S	GPIO	Provides a method for controlling the projector using electrical signals.	All		
R	RS232	Sends/receives Christie serial commands using a standard RS232 serial cable.	All		
T	Audio Out	Connect amplified speakers or headphones to the stereo headphone jack (3.5 mm) and receive the system's audio output signal.	VOM-IF		
U	GigE AUX	Used for communication with the IPG laser rack .	All	X	X
V	Wired keypad	Physically connects a remote control to the projector.	All		

Copyright © 2025 Christie Digital Systems USA, Inc. All rights reserved.
If printed, please recycle this document after use.

VOM-HBI Video Input panel

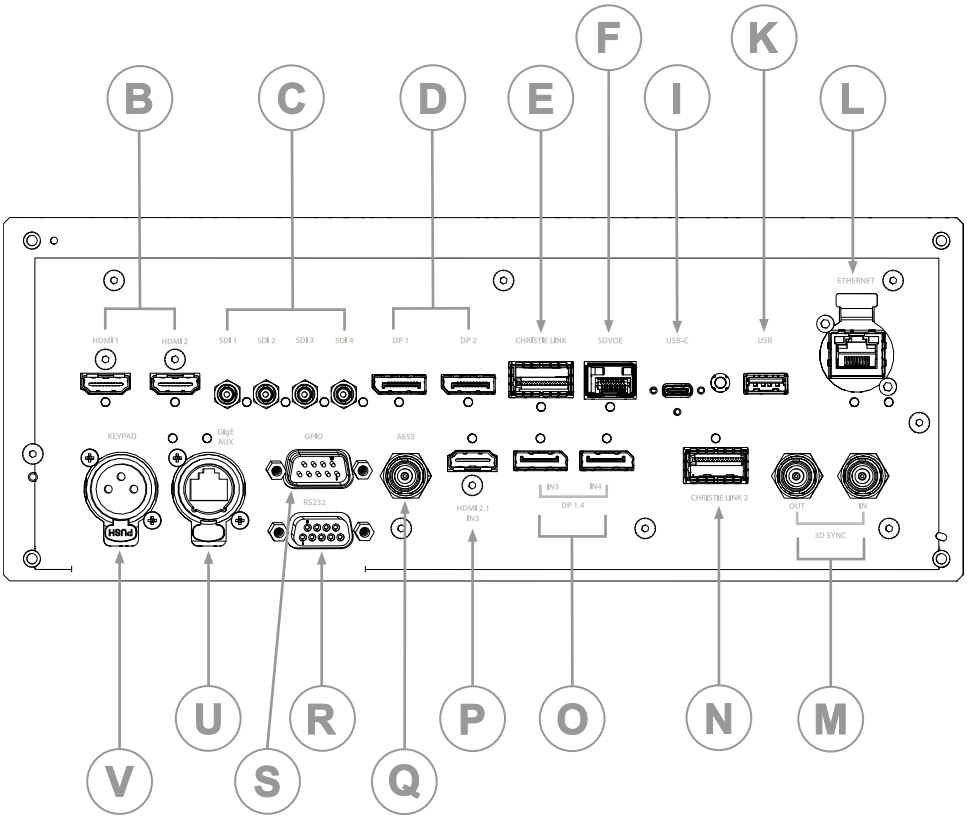

Copyright © 2025 Christie Digital Systems USA, Inc. All rights reserved.
If printed, please recycle this document after use.

VOM-IF Video Input panel

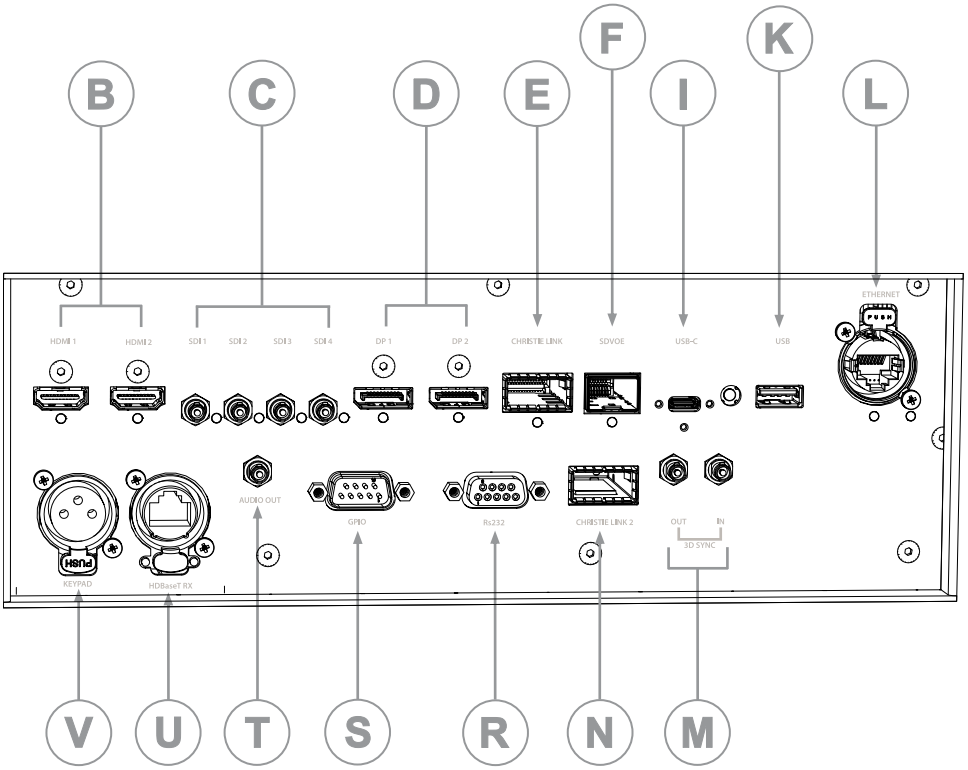

Configuration options

The Video Input panel has two configuration options: Default and SDVoE. The selected option determines what video input configurations are enabled on the Video Input panel.

To enable the SDVoE option, plug in the SDVoE source into the Video Input panel and from the Input Configuration menu select **Main Menu** > **Configuration** > **Input Settings** > **Video Input configuration** > **SDVoE**.

To return to the default configuration, select **Default**.

Configuring video input

Defines which video inputs are available. This setting is persistent so when the projector powers up, it loads the video input defined below.

When changing the selection, the system takes up to 15 seconds to re-configure. During this time the user interface is not responsive.

1. Select **MENU** > **Configuration** > **Input Settings** > **Video Input Configuration**.
2. Select the appropriate video input configuration:
   - **Default**—Supports HDMI, DP, SDI, and ChristieLink. (Default)
   - **SDVoE**—Supports HDMI, SDVoE, and ChristieLink.
3. Select **Enter**.

Copyright © 2025 Christie Digital Systems USA, Inc. All rights reserved.
If printed, please recycle this document after use.

Enabling projector communication

Enable the receivers and the wired keypad to communicate with the projector from the remote.

The front and rear IR sensors receive transmissions from the IR remote. Keep the transmission path to these sensors unobstructed for uninterrupted communications with the projector.

Alternatively, you can connect a wired version of the remote to the connector on the IMXB labeled Wired Keypad.

1. Select **MENU** > **Communications** > **Projector Communications**.
2. To assign the projector an ID, select **Projector ID**.
3. Use the up and down keys to enter the projector ID.
4. Select **Enter**.
5. To enable the rear IR sensor, select **Rear IR Enabled** and select **Enter**.
6. To enable a wired version of the remote, select **Wired Keypad Enabled** and select **Enter**.
   By default this feature is enabled.

Setting the remote access level

Determine if and how the projector can be accessed remotely for the RS232 port or the Ethernet.

1. From the display panel, select **MENU** > **Admin** > **Service**.
2. Enter the service password.
3. To determine the remote access for the Ethernet port, select **Remote Access Level (Ethernet)**.
4. Select the appropriate remote access level:
   - No Access
   - Login Required
   - Free Access
5. Select **Enter**.
6. To determine the remote access for the RS232 IN port, select **Remote Access Level (RS232 IN)**.
7. Select the appropriate remote access level:
   - No Access
   - Login Required
   - Free Access
8. Select **Enter**.

Selecting a port configuration

Select a port configuration before you select a video source.

1. From the display panel, select **INPUT**.
2. To access the port configuration dialog from the input screen, select the right arrow.

Copyright © 2025 Christie Digital Systems USA, Inc. All rights reserved.
If printed, please recycle this document after use.

You can also access the Port Configuration screen from **MENU** > **Configuration** > **Input Settings** > **Input Port Configuration**.

3. From the Port Configuration screen, navigate the list of port configurations until you find the selection that best matches your configuration.

   The range of available configuration depends on the projector model and/or input/output combinations. When the Default configuration is selected (**Main Menu** > **Configuration** > **Input Settings** > **Video Input configuration** > **Default**), the following configurations are supported:

   - One-port
   - Two-port
   - Four-port quadrants
   - One-port dual-input 3D (3D license-specific)

   When SDVoE is selected (**Main Menu** > **Configuration** > **Input Settings** > **Video Input configuration** > **SDVoE**), the one-port configuration is selected.

4. To return to the Input screen, select the left arrow.

Selecting a video source

After connecting a video source to the projector and making sure your port configuration is correct, you must select it.

1. From the display panel, select **INPUT**.
2. Navigate the list of input selections until you find a selection that best matches your configuration.

   The range of available input selections depends on the projector model and/or input/output combinations. When the Default configuration is selected, the following inputs are supported for each configuration:

   - One-port—HDMI, SDI, DisplayPort, Christie Link
   - Two-port—DisplayPort, Christie Link
   - Four-port quadrants—SDI
   - One-port dual-input 3D (3D license-specific)—HDMI, SDI, DisplayPort, Christie Link

   When SDVoE is selected, the HDMI, SDVoE, and Christie Link inputs are supported for the one-port configuration.

3. To select the input, select **Enter**.

Connecting an HDMI video source

For the projector to accept digital video data from HDMI sources, plug the HDMI source directly into the Video Input panel (the B callout shows the HMID 2.0 port and the P callout shows the 2.1 port in the Video Input panel images).

For more details (including images and callouts) on the Video Input panels, see *Video Input panel* (on page 65).

The input configurations listed below are supported.

Copyright © 2025 Christie Digital Systems USA, Inc. All rights reserved.
If printed, please recycle this document after use.

Input configuration	Description
One-Port	Enables connection of one HDMI cable.

For supported video formats for your projector model, see .

Connecting 12G, 6G, 3G, or HD SDI video source

For the projector to accept digital video data from 12G, 6G, 3G, or HD SDI video source, plug the source directly into the Video Input panel (the C callout in the Video Input panel images).

For more details (including images and callouts) on the Video Input panels, see *Video Input panel* (on page 65).

Some video sources may not be fully compliant with the relevant SDI SMPTE standards and do not include the SMPTE 352M Payload ID information. If the picture from a 1.5G or 3G SDI source does not display as expected, contact Christie Technical Support for an `SDI-Payload Override` command for the specific signal type. This allows for the display of signals missing Payload IDs from non-compliant sources.

Input configuration	Description
One-Port	Enables connection of any of the 12G, 6G, 3G, and HD SDI input standards.
Four-Port Quadrant	May be used with four SDI inputs.

For supported video formats for your projector model, see .

Connecting a DisplayPort video source

For the projector to accept digital video data, plug the DisplayPort source directly into the Video Input panel (the D callout shows the DisplayPort 1.2 port and the O callout shows the DisplayPort 1.4 port in the Video Input panel images).

For more details (including images and callouts) on the Video Input panels, see *Video Input panel* (on page 65).

The input configurations listed below are supported.

Input configuration	Description
One-Port	Enables connection of one DisplayPort cable. In this configuration the DisplayPort input supplies the entire video raster.
Two-Port	Enables connection of two DisplayPort cables. Each DisplayPort input supplies one of two columns of a 4K input image.

For supported video formats for your projector model, see .

Copyright © 2025 Christie Digital Systems USA, Inc. All rights reserved.
If printed, please recycle this document after use.

Connecting Christie Link video source

For the projector to accept digital video data from Christie Link, plug the source directly into the Video Input panel (the E callout in the Video Input panel images).

For more details (including images and callouts) on the Video Input panels, see *Video Input panel* (on page 65).

These input configurations are set up on the Christie Link transmitter. Refer to the .

Christie Link video loop-out enables signals received on the Christie Link input (labeled Christie Link 1 on the *Video Input panel* (on page 65)) to be passed through to the Christie Link output (labeled Christie Link 2 on the *Video Input panel* (on page 65)). The loop through connection is automatically established whenever active Christie Link QSFP modules are plugged into the respective connectors on the projector's Video Input panel.

Input configuration	Description
One-Port	Enables connection of Christie Link 4K transmitter to the projector.
Two-Port	

For supported video formats for your projector model, see .

Connecting an SDVoE video source

For the projector to accept digital video data from a Christie Terra Transmitter, plug the SDVoE source directly into the SFP+ connector on the Video Input panel (the F callout in the Video Input panel images).

For more details (including images and callouts) on the Video Input panels, see *Video Input panel* (on page 65).

After plugging the SDVoE source into the Video Input panel, the video source must be selected from the Input Configuration menu by selecting **Main Menu** > **Configuration** > **Input Settings** > **Video Input configuration** > **SDVoE**.

- Not all projectors support for the SDVoE feature. To determine if your projector supports the SDVoE function, see *Determining if SDVoE is supported* (on page 73) or contact Christie Technical Support.
- When SDVoE is selected, the DisplayPort and SDI inputs are no longer supported.

The input configuration listed below is supported.

Input configuration	Description
One-Port	Enables 2D connection from an SDVOE source (such as the Christie Terra Transmitter).

For supported video formats for your projector model, see .

Copyright © 2025 Christie Digital Systems USA, Inc. All rights reserved.
If printed, please recycle this document after use.

Determining if SDVoE is supported

Follow these steps to determine if the card cage supports SDVoE:

1. Select **Menu** > **Configuration** > **Input Settings**.
2. View the options in the Video Input Configuration list.
   - If SDVoE is listed, the projector supports SDVoE.
   - If SDVoE (Unsupported) is listed, the projector does not support SDVoE.

Connecting to a computer with USB

The two USB ports can be used for upgrades, backups, restores, profile management, and interrogator retrieval.

- USB-C 3.0 Interface (the I callout in the Video Input panel images)—USB-C Connector with locking mechanism supporting USB 3.0 protocol (5 Gb/s), power over USB (2 A @ 5 VDC).

  This port can be used as a high speed data interface.
- USB Type 3.0-A Interface (the K callout in the Video Input panel images)—USB Type A connector with locking mechanism supporting USB 3.0 protocol (5 Gb/s) and power over USB (2 A @ 5 VDC). Intended for data ingest using USB flash drives for the purposes of upgrading, profile management, and interrogator retrieval.

  This port can be connected to a Christie-recommended WiFi USB device to provide wireless Ethernet control.

For more details (including images and callouts) on the Video Input panels, see *Video Input panel* (on page 65). For information on performing upgrades, backups, restores, profile management, and interrogator retrieval, refer to the *Christie TruLife+ User Guide (P/N: 020-103315-XX)*.

Connecting to a computer or server with 10/100/1000 base-T Ethernet

Communicate with a remote computer, server, or an existing network using a RJ-45 cable.

The port located on the Video Input panel (the L callout in the Video Input panel images) uses the Christie proprietary protocol or Art-Net control protocol and is intended for Christie accessories or automation controllers only.

For more details (including images and callouts) on the Video Input panels, see *Video Input panel* (on page 65).

1. Use an RJ-45 cable to connect the Ethernet hub or switch to the Ethernet port, located on the projector Video Input panel.

   VOM-IF:

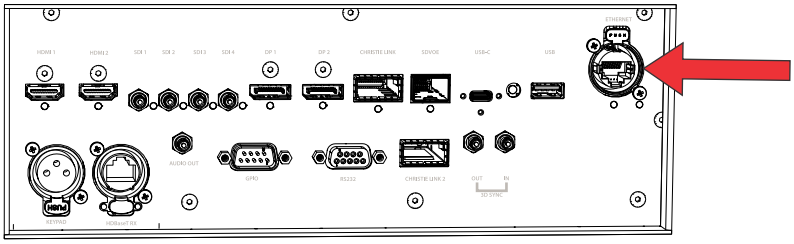

Copyright © 2025 Christie Digital Systems USA, Inc. All rights reserved.
If printed, please recycle this document after use.

VOM-HBI:

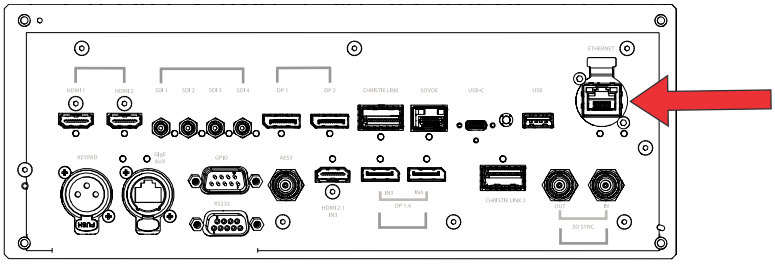

2. When using the Christie serial protocol over Ethernet, connect to port 3002.
3. For applications or equipment using serial communications, use the Christie proprietary serial protocol or Art-Net protocol to communicate with the Ethernet port on the Video Input panel.

Setting up the Ethernet

Ethernet is set up to obtain an IP address automatically if a DHCP server is on the network, modify IP settings, or manually enter an address.

You cannot change the IP settings using the web interface.

1. From the display panel, use the arrow keys to select **IP Settings**.
2. To set the type of network, select **DHCP** or **Static**.
3. If you selected Static, manually enter the network information for the **IP Address**, **Subnet**, and **Gateway**.
4. Select **Apply** and select **Enter**.
5. Select **MENU** > **Communications** > **Network Settings**.
6. Select **Device name**.
7. Use the up and down keys to enter the name of the projector.
8. Select **Enter**.

Communicating with Christie Eclipse through Art-Net

Christie Eclipse supports communications through the Art-Net using the Ethernet connector.

1. Select **MENU** > **Communications** > **Art-Net Settings**.
2. Verify the **Enable Art-Net** option is disabled.

   Disabling Art-Net before configuring it ensures Christie Eclipse does not accidentally respond to DMX messages destined for other devices on the network.
3. To specify which subnet the projector belongs to, in the Art-Net Subnet field adjust the value between 0 and 15.

   The subnet provides expandability beyond the universe level.
4. To confirm your selection, select **Enter**.
5. To specify which universe the projector belongs to, so it can filter out all other data packets, in the Art-Net Universe field, adjust the value between 0 and 15.

   For Art-Net, data is broadcast over an Ethernet network, so every device receives every packet of data, whether the device belongs to that universe or not.

Copyright © 2025 Christie Digital Systems USA, Inc. All rights reserved.
If printed, please recycle this document after use.

6. To confirm your selection, select **Enter**.
7. To determine the starting channel for this projector, in the Base Channel field, adjust the value between 1 and 488.

   If multiple projectors are used on the same universe and are to be controlled independently, this value must be changed. For example, if both projectors are using the Shutter (20 channels), projector 1 should start at base channel 1 and projector 2 should start at base channel 21.
8. To confirm your selection, select **Enter**.
9. Select **Enable Art-Net**.
10. To enable the Art-Net functionality, select **Enter**.

Art-Net channel listing

There are 512 channels per universe. Christie Eclipse specifies 24 channels.

Christie Eclipse has multiple methods of being controlled in addition to Art-Net. If a setting is changed through another interface, the DMX controller can re-assert control by changing the value on the appropriate DMX channel.

Channel	Name	Description	Suggested starting position	Notes
1	Slider Lock	0 to 171 = Locked 172 to 255 = Unlocked	0	—
2	Power	0 to 85 = Powers off the projector (goes into Standby mode) 86 to 171 = Cancel timer 172 to 255 = Powers on the projector (switches light source on, warm up mode)	128	Must be valid for five seconds before it is applied.
3	Shutter	0 to 85 = Closes the shutter (black screen) 172 to 255 = Opens the shutter (live video)	255	Christie recommends setting this channel to 255 prior to powering up the projector so it is consistent with the shutter state after the projector is fully on.
4	Lens Shift Enable	0 to 171 = Disables lens shift 172 to 255 = Enables lens shift	—	Locks all lens motors.
5	Zoom (Coarse)	0 = Smallest image possible (0%) 255 = Largest image possible (100%)	128	• Locked by the Lens Shift Enable channel. • Scaled as a percentage of the total control range. • A 250 ms delay exists before sending this channel to the projector.
6	Zoom (Fine)			

Copyright © 2025 Christie Digital Systems USA, Inc. All rights reserved.
If printed, please recycle this document after use.

Channel	Name	Description	Suggested starting position	Notes
7	Focus (Coarse)	0 = 0% 255 = 100%	128	• Locked by the Lens Shift Enable channel. • Scaled as a percentage of the total control range. • A 250 ms delay exists before sending this channel to the projector.
8	Focus (Fine)			
9	Lens Horizontal Position (Coarse)	0 = Full left position (0%) 255 = Full right position (100%)	128	• Locked by the Lens Shift Enable channel. • A 250 ms delay exists before sending this channel to the projector.
10	Lens Horizontal Position (Fine)			
11	Lens Vertical Position (Coarse)	0 = Full lower position (0%) 255 = Full upper position (100%)	128	• Locked by the Lens Shift Enable channel. • A 250 ms delay exists before sending this channel to the projector.
12	Lens Vertical Position (Fine)			
13	Input	1 to 80 = Input index 86 = Load 91 to 170 = Additional input indices 171 = Execute	0	To change inputs, send the following sequence: `Load` > `Input index` > `Execute` Channel 1 slider lock can be used if a keypad is not available for the input selection.
14	Fade Time	0 = 0 seconds 250 = 2.5 seconds	—	Determines the length of time it takes for the shutter to open and close with a fading effect.
15 to 24	Reserved	Reserved for future use.	—	—

Configuring the RS232 port

Configure the RS232 port to send Christie serial commands using a standard RS232 serial cable (the R callout in the Video Input panel images).

For more details (including images and callouts) on the Video Input panels, see *Video Input panel* (on page 65).

For more information, on the serial commands, see the *Christie TruLife+ Serial Commands Guide (P/N: 020-103316-XX)* .

1. Select **Menu** > **Communications** > **Projector Communication**.
2. Use the down arrow to select **Baud Rate**.
3. Select the appropriate baud rate and select **Enter**.

Copyright © 2025 Christie Digital Systems USA, Inc. All rights reserved.
If printed, please recycle this document after use.

4. Use the down arrow to select **Network Routing**.
5. Select the type network routing appropriate for your projector and select **Enter**.

Configuring the GPIO

The Generic Purpose Input Output (GPIO) provides a flexible method of interfacing with external devices to the projector.

The GPIO is configured to automate real time events. Each of the seven pins is defined as either an input or output depending on the required outcome. The remaining two pins are reserved for ground and power.

Configure the pin as an input if you want the projector to respond to something the device does and as an output if you want the external device to respond to an action taken by the projector. For example, configure the pin as an output if you want the lighting in a room to automatically dim when the projector is turned on.

This feature is only available on the web interface.

1. From the home page of the web interface, select **Macros and GPIO**.
2. Select **GPIO Configuration**.
3. In the GPIO Configuration dialog under Update the New Configuration, toggle the pins you want active for the input and output.

   A blue pin indicates input and a green pin indicates output.
4. Select **Apply**.

GPIO connector

The GPIO connector located on the input panel (the S callout in the Video Input panel images) provides a flexible method of interfacing with the projector. Seven GPIO pins are available on the nine pin D-Sub GPIO connector. Two other pins are reserved for ground and power.

For more details (including images and callouts) on the Video Input panels, see *Video Input panel* (on page 65).

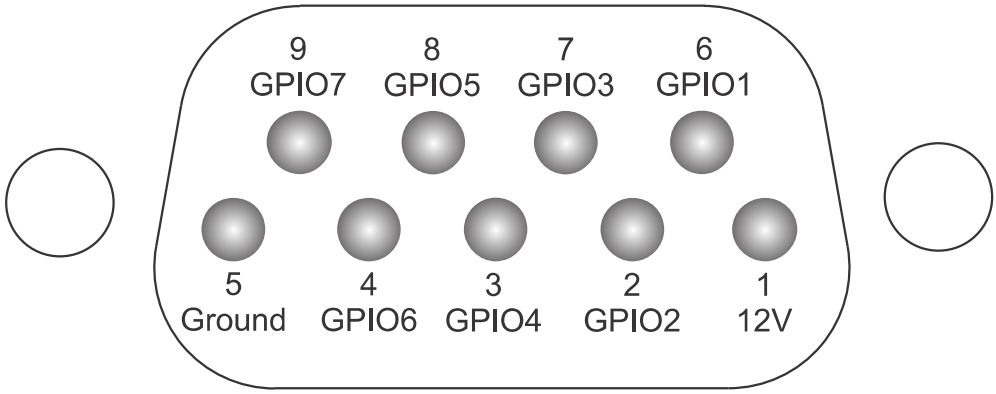

D-SUB pin number	Signal	Output high (Voh)	Notes
Pin 1	+12V	—	1A max

Copyright © 2025 Christie Digital Systems USA, Inc. All rights reserved.
If printed, please recycle this document after use.

D-SUB pin number	Signal	Output high (Voh)	Notes
Pin 2	GPIO 2	5V	75mA max (e)fused to prevent damage
Pin 3	GPIO 4		
Pin 4	GPIO 6		
Pin 5	Ground	—	—
Pin 6	GPIO 1	5V	75mA max (e)fused to prevent damage
Pin 7	GPIO 3		
Pin 8	GPIO 5		
Pin 9	GPIO 7		

All GPIO pins are weakly pulled up to 3.3V.

Enabling the wired remote keypad

The wired remote keypad interface supports the NEC IR communication protocol.

1. Connect the remote cable in the Wired keypad port on the Video Input panel.

   VOM-IF:

   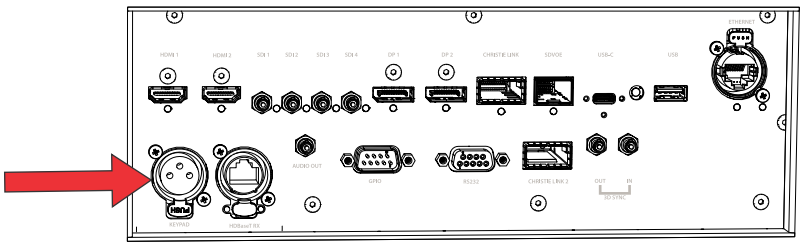

   VOM-HBI:

   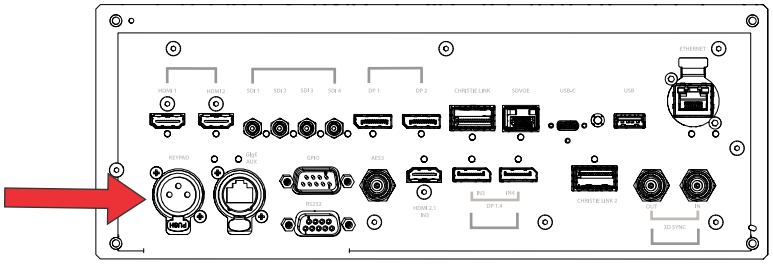

2. Connect the remote cable in the bottom of the remote.

Copyright © 2025 Christie Digital Systems USA, Inc. All rights reserved.
If printed, please recycle this document after use.

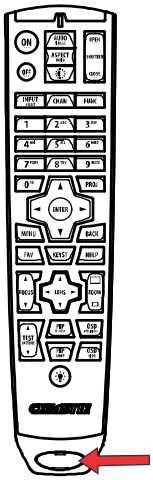

3. On the projector, select **MENU** > **Communications** > **Projector Communications**.
4. To enable a wired version of the remote, select **Wired Keypad Enabled** and select **Enter**.
   By default this feature is enabled.

Copyright © 2025 Christie Digital Systems USA, Inc. All rights reserved.
If printed, please recycle this document after use.

Regulatory

This product conforms to the latest regulations and standards related to product safety, environmental, and electromagnetic compatibility (EMC) requirements.

Safety

- CAN/CSA C22.2 No. 60950-1-07 + Am 1:2011+ Am 2:2014 Information Technology Equipment Safety Part 1: General Requirements
- ANSI/UL 60950-1-2014 – Information Technology Equipment – Safety – Part 1: General Requirements
- IEC 60950-1:2005 + Amendment 1:2009 + Amendment 2:2013 – Information Technology Equipment - Safety - Part 1: General Requirements
- EN 60950-1:2006 + A11:2009 + A1:2010 + A12:2011 + A2:2013 – Information Technology Equipment – Safety – Part 1: General Requirements
- CAN/CSA-C22.2 No. 62368-1: 2014 – Audio/video, information and communication technology equipment - Part 1: Safety requirements.
- UL 62368-1: 2014 – Audio/video, information and communication technology equipment - Part 1: Safety requirements.
- IEC 62368-1:2014 - Audio/Video, Information And Communication Technology Equipment - Part 1: Safety Requirements
- EN 62368-1: 2014 – Audio Video, IT & Communication Technology Equipment (AV/ICT) – Part 1: Safety Requirements
- IEC 62471-5:2015 – Photobiological Safety of Lamps and Lamp Systems – Part 5: Image projectors
- IEC 60825-1:2014 - Safety of Laser Products - Part 1: Equipment Classification and Requirements
- ANSI Z136.1:2014 – Safety of Lasers

Electro-magnetic compatibility

Emissions

- FCC CFR47, Part 15, Subpart B, Class A – Unintentional Radiators
- CAN ICES-003 (A)/NMB-003 (A) – Information Technology Equipment (Including Digital Apparatus) – Limits and Methods of Measurement
- CISPR 32/EN 55032, Class A – Electromagnetic Compatibility of Multimedia Equipment – Emission Requirements
- IEC 61000-3-2/EN61000-3-2 - Limits for Harmonic Current Emissions

Copyright © 2025 Christie Digital Systems USA, Inc. All rights reserved.
If printed, please recycle this document after use.

- IEC 61000-3-3/EN 61000-3-3: Limitations of Voltage Changes, Voltage Fluctuations, and Flicker input current ≤ 16 A per phase and not subject to conditional connection

Immunity

- CISPR 35/EN 55035 Electromagnetic compatibility of multimedia equipment - Immunity requirements

California law on security

- California Law Requiring Internet Connected Devices To Include Reasonable Security Features (California Civil Code Section 1798.91.04)

Environmental

- EU Directive (2011/65/EU) on the restriction of the uses of certain hazardous substances (RoHS) in electrical and electronic equipment and the applicable official amendment(s).
- EU Directive (2012/19/EU) on waste and electrical and electronic equipment (WEEE) and the applicable official amendment(s).
- Regulation (EC) No. 1907/2006 on the registration, evaluation, authorization and restriction of chemicals (REACH) and the applicable official amendment(s).
- China Ministry of Information Industry (along with 7 other Government Agencies) Order No.32 (01/2016) on the control of pollution caused by electronic information products, hazardous substances concentration limits (GB/T 26572 - 2011), and the applicable product marking requirement (SJ/T 11364 - 2014).

International packaging recycling mark requirements.

- EU Directive (2012/19/EU) on waste and electrical and electronic equipment (WEEE) and the applicable official amendment(s).
- EU Directive (94/62/EC) on packaging and packaging waste
- China packaging recycling mark standard (GB18455-2001)

Copyright © 2025 Christie Digital Systems USA, Inc. All rights reserved.
If printed, please recycle this document after use.