REVISION HISTORY OF:			
REV	DESCRIPTION OF CHANGE	BY	REV DATE

LCD Panel SUHD55-V3
(135-050106-XX)

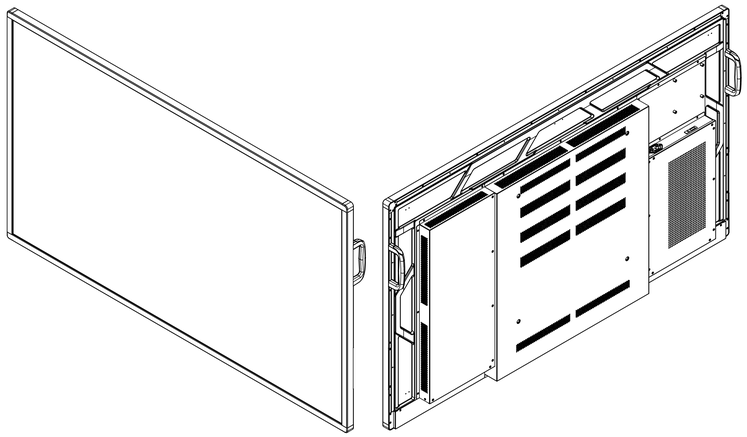

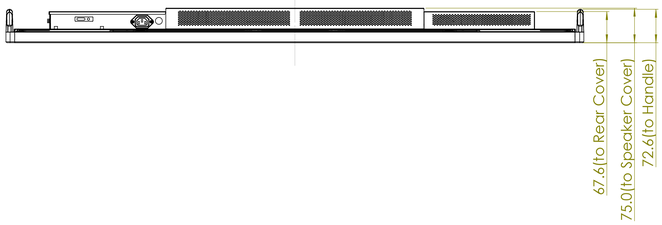

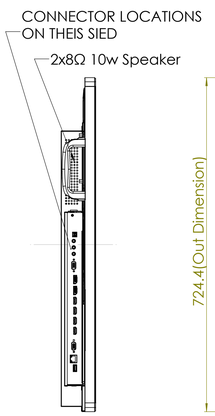

LEFT VIEW

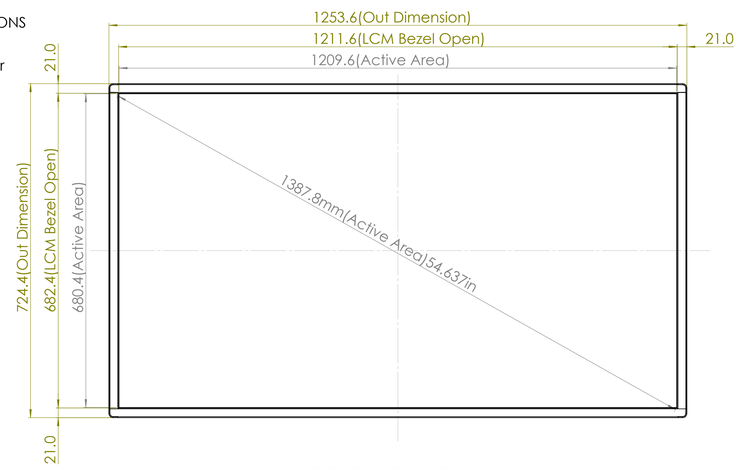

FRONT VIEW

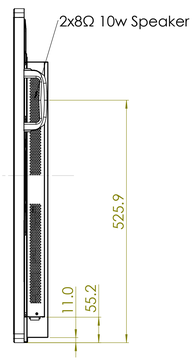

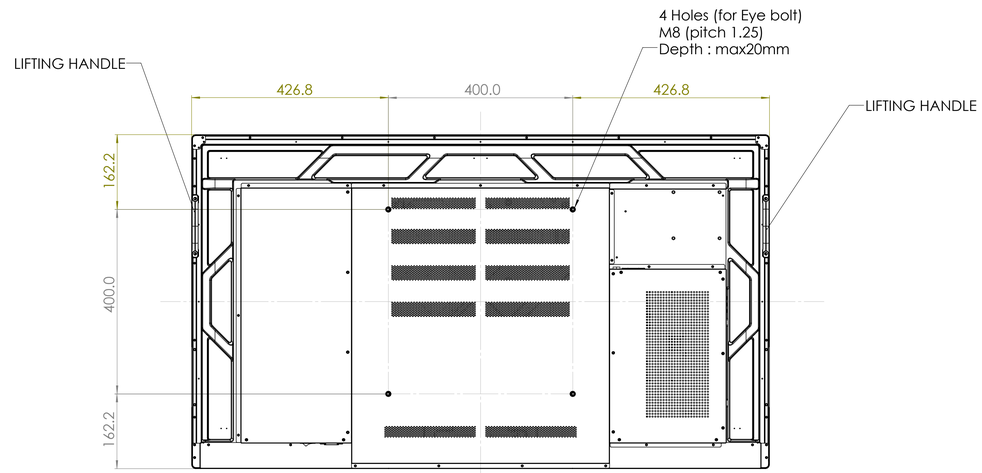

BACK VIEW

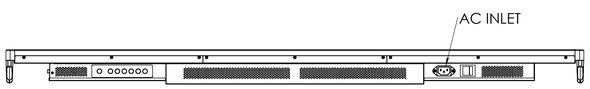

BOTTOM VIEW

GENERAL NOTES:
MASS: 20.3 + 5.8 kg (44.8 lbs + 12.8 lbs)
AMBIENT AIR TEMPERATURE:0 - 40 °C (32–104 °F) MAX
MAX. POWER REQUIREMENTS: 100-240V~ 2.0A. 50/60Hz, 175W
TYPICAL POWER REQUIREMENTS: 130W
STANBY POWER CONSUMPTION: MAX. 0.5W(WAKE UP FROM DEEP SLEEP MODE)

UNITS INCHES MILLIMETRES
UNLESS OTHERWISE SPECIFIED
INTERPRET DIMENSIONS AND TOLERANCES PER ASME Y14.5M-1994
TOLERANCES APPLY AS SHOWN BELOW

DECIMAL PLACES	INCHES	MILLIMETRES
.XXX	± .063	± 1.6
.XX	± .125	± 3.1
.X	± .250	± 6.3
ANGULAR DIMENSIONS		
XX°	±1.0°	
XX.X°	±0.5°	

DRAWN BY: Ray
DRAWN DATE: 2025/08/08
APPROVED BY: SC
APPROVAL DATE: 2025/08/08

PROPRIETARY
NOT TO BE DISCLOSED OR REPRODUCED IN ANY MANNER WITHOUT THE EXPRESS WRITTEN PERMISSION OF CHRISTIE

THIRD ANGLE PROJECTION

CHRISTIE

CHRISTIE DIGITAL SYSTEMS USA, INC.
CHRISTIE DIGITAL SYSTEMS CANADA, INC.

PART DESCRIPTION: DWG Line SUHD55-V3

SIZE	PART NUMBER	REVISION
E	020-002182-01	01

SCALE 1:4 MASS LBS [KG] SHEET 1 OF 1